SPL0100
LEG EXTENSION

TRUE FITNESS

SCAN FOR UP-TO-DATE
OWNER'S MANUAL

SCAN FOR
ASSEMBLY VIDEO

MODEL SPL0100
(MAN-SPL0100 REV09)

OWNER'S MANUAL

IMPORTANT—PLEASE READ

All products shown are prototype. Actual product delivered may vary. Product specifications, features, and software are subject to change without notice.

For the most up-to-date version of this manual, please see our website:
https://truefitness.com/services-support/user-manuals/

CONTACTING OUR SUPPORT TEAM

To contact TRUE for any of your pre or post installation questions, please call our toll-free numbers Monday - Friday during normal business hours:

- Commercial Direct Customers and Corporate Accounts | 800.868.8783
- Retail Customers and Distributors | 800.883.8783

Or email us:

- Commercial Direct Customers and Corporate Accounts | service.direct@truefitness.com
- Retail Customers and Distributors | service@truefitness.com
- Service International | int.service@truefitness.com

When contacting TRUE, please have the following information ready:

- Serial Number of Unit
- Contact Information—Full Name, Email, and Phone Number
- Address of Facility or Residence
- Detailed Description Regarding Symptom of the Unit (along with pictures or video if applicable)

NOTE: Authorized service providers, dealers, and distributors may also use TRUE's online resource | portal.truefitness.com.

CONTACTING OUR SALES TEAM

Interested in owning more TRUE products? Please contact us with any product inquires so that we may direct you to the appropriate sales representative to help answer your questions.

- Phone | 800.426.6570
- Email | sales@truefitness.com

REPORTING FREIGHT CLAIMS OR PARTS DAMAGE

Unfortunately, sometimes materials can be damaged during shipment. If materials are damaged during shipment, please follow the guidelines below to determine the appropriate process for you to follow.

Severe Damage—Obvious damage to external packaging and internal product.

Please refuse the shipment and it will be returned to TRUE by the carrier. Contact TRUE product support by calling 800.883.8783 or sales support by calling 800.426.6570 Monday-Friday during normal business hours to notify us that the shipment has been refused. Once we have received the damaged shipment, a replacement shipment will be sent to you. If the shipment comes in multiple boxes, only refuse boxes with damage.

Slight Damage—Minimal damage to external packaging with unknown internal damage to product.

If the shipment has minimal damages and you are not sure if the actual product is damaged, you must sign the bill of lading as damaged when accepting the shipment. Once you have opened the box and you have determined something is indeed damaged, please gather the serial number, model number, description of damage, and photos of damage. Please make sure the photos include the damaged product as well as the damaged box the product arrived in. Contact TRUE product support (service@truefitness.com | 800.883.8783) or TRUE sales support (sales@truefitness.com | 800.426.6570) Monday-Friday during normal business hours.

Concealed Damage—No damage to external packaging but internal damage to product.

You may receive a shipment that looks intact and discover once the box has been opened that there are hidden damages. Please notify the carrier immediately. TRUE will not be able to file a claim if the carrier is not notified in a timely manner. Once you have called the carrier you will need to gather the serial number, model number, description of damage, and photos of damage. Contact TRUE product support (service@truefitness.com | 800.883.8783) or TRUE sales support (sales@truefitness.com | 800.426.6570) Monday-Friday during normal business hours.

TABLE OF CONTENTS

SAFETY INSTRUCTIONS

IMPORTANT SAFETY INSTRUCTIONS—SAVE THESE INSTRUCTIONS....5
GENERAL CARE AND MAINTENANCE....7
COMMERCIAL MAINTENANCE SCHEDULE....8
COMPLIANCES....8
DIMENSIONS AND WEIGHTS....9
SHROUD OPTIONS....9
WEIGHT STACK CONFIGURATIONS....10
WARNING AND INTENDED USE LABELS....11

ASSEMBLY INSTRUCTIONS

PREASSEMBLY CHECKLIST....13
ASSEMBLY STEPS....15

PREVENTATIVE MAINTENANCE

DAILY INSPECTION AND MAINTENANCE....35
WEEKLY INSPECTION AND MAINTENANCE....35
OTHER SCHEDULED PREVENTATIVE MAINTENANCE....36
CLEANING THE EQUIPMENT....36
CABLE INSPECTION AND MAINTENANCE....37
WEIGHT STACK SELECTOR PIN INSPECTION....40

WARRANTY INFORMATION

COMMERCIAL WARRANTY....41
WARRANTY DETAILS....42
WARRANTY REGISTRATION....43

SAFETY INSTRUCTIONS

IMPORTANT SAFETY INSTRUCTIONS—SAVE THESE INSTRUCTIONS

FACILITY AND USER SAFETY PRECAUTIONS

- Review and understand all of the warning labels affixed to this machine and on the facility safety sign.
- Be certain that the machine operation is understood before it is used. Refer to the instructional procedure label affixed to the machine.
- Make sure all users are properly trained on how to use this equipment. If this machine is being used in a commercial setting, end users may not have access to this owners manual. It is the responsibility of the facility to instruct users as to the proper usage of the equipment as well as making them aware of potential hazards. Maximum user weight is 300 lbs / 136 kg.
- Use each machine only for the intended exercise. Do not allow anyone to invent exercises not included on the instructional procedure label or the intended use label.
- Do not modify the machine.
- This equipment meets industry safety standards for stability when used for the intended exercise. Do not allow straps, resistance bands or other means to be attached to the framework of this machine to perform stretching or body weight exercises. This can result in machine instability and lead to serious crushing injuries.
- Keep children away from this equipment. Adults should closely supervise use by teenagers.
- It is recommended that users receive a thorough medical exam before commencing an exercise program. All medical issues should be reviewed to ensure that weight training will not aggravate pre-existing medical conditions.
- If the machine appears damaged or inoperable, contact a facility staff member to place an "OUT OF ORDER, DO NOT USE" sign on the machine until it is repaired. Only use TRUE supplied replacement components to service this machine.
- Instruct users not to wear loose or dangling clothes or have headphone wires hanging when using this equipment.
- Do not attempt to free any jammed assemblies by yourself as this may cause injury.
- On Plate Loaded and Free Weight machines:
    - Use of spotter(s). Instruct users to seek the advice of the facility staff as to the appropriate use of spotters when lifting. More than one spotter may be required depending upon the amount of weight being lifted.
    - Instruct users to load weight plates evenly and carefully to avoid tipping equipment and crushing injuries.
    - If the machine is equipped with safety stops or catches, inspect them and verify their proper operation before use and make sure they are securely in place before using or exiting the machine. Be certain members are instructed on how to operate and adjust all safety mechanisms.
    - This equipment is designed for standard olympic size weight plates with a 50mm bore (1.9").
    - Do not exceed the maximum weight capacity of the machine. Maximum plate size is 45 lbs / 20 kg.
- On Selectorized and cable equipped machines:
    - Do not allow users to perform any exercise by holding the end of the cable and/or the cable end fitting. Use only appropriate handles or attachments properly connected to the cable end.
    - Do not high-pin or double-pin the weight stack. Do not allow the machine to be used if the top plate or weight stack is pinned in a raised position. Use an assistant and carefully return the machine to the proper position with the cap plate resting on the top weight. Inspect the entire length of the cable to ensure that it is properly seated in all of the pulley grooves.
    - Do not allow the use of weight plates or dumbbells to be used as a means to add additional weight to the weight stacks. Use only the TRUE adder weight system specifically designed for the machine.

INSTALLATION SAFETY PRECAUTIONS

- Read this installation manual entirely before assembling this equipment.
- Verify that there is adequate space surrounding this piece of equipment for safe access and operation. Installation must meet ADA requirements for accessibility.
- Install this piece of equipment on a solid level surface that does not deviate more than 1/8″ over a 10′ distance (or as defined and required by local building and architectural codes).
- **DO NOT** install any fitness equipment near a pool, hot tub or other damp locations. Corrosion caused by installation in these locations can lead to premature failure of components.
- **Be sure all hardware is tight before using this equipment.**
- Some assembly materials may come preassembled in the carton. Refer to the Assembly Instructions for more information on disassembling any assembly materials before beginning assembly.

EQUIPMENT INSTALLATION AND STABILITY

- TRUE Fitness designs its products to be stable when used as intended.
- Training environments vary, and TRUE Fitness cannot predict the specific conditions under which users will set up or operate our products.
- To ensure safety and optimal performance, TRUE Fitness strongly recommends that all flexibility and strength training equipment be securely anchored to a solid, level surface.
- Anchoring holes are provided on the feet of the frame. All anchoring locations must be used when anchoring the equipment to the floor. Proper anchoring prevents instability, rocking, or tipping during use.
- Regardless of the fastener type or method used, each anchoring fastener must withstand a minimum pull-out force of 3.3 kN (750 lbs) from the floor to ensure proper stability and safety compliance.
- It is the facility's responsibility to ensure installation complies with all applicable local and regional building codes and that equipment is installed according to manufacturer guidelines.
- A licensed contractor or structural engineer should be consulted to verify that installation methods meet local building regulations and are appropriate for the specific type of flooring used.
- TRUE Fitness shall not be held liable for any injuries, damages, or equipment malfunctions resulting from failure to properly secure or bolt equipment to the floor or from improper installation practices.
- If two assembled units are linked together, it is strongly recommended that both units be anchored to the floor.

MAINTENANCE SAFETY PRECAUTIONS

- Refer to the maintenance schedule table in this manual for when to perform maintenance.
- Check the function of your machine DAILY by verifying the following:
  - If equipped with cables, inspect cables and end fittings for any signs of wear. Replace if worn, frayed, or damaged with TRUE replacement components.
  - Verify that all adjustments are possible and carried out with ease. Make sure that each adjustment pin inserts completely into each position without binding.
  - Verify that safety catches and stops are in proper working order and engaged.
  - Verify that the exercise is performed smoothly, free of noise, and/or binding.
  - If equipped with a weight stack, verify that the proper weight selector pin is in place.
- Check the function of your machine WEEKLY by verifying the following:
  - Nuts, Bolts, and Fasteners: check tightness weekly. If any hardware has become loose, retighten it, use Loctite® Threadlocker 242, or both.
  - Frames and Lifting Arms: Inspect weekly for integrity and function. Replace any component at first signs of wear. Use only TRUE supplied components.
- Replace any warning label at the first sign of wear. Labels and the facility safety sign may be obtained from TRUE.

GENERAL CARE AND MAINTENANCE

⚠ IMPORTANT

Preventative maintenance is crucial to maintaining the function and safety of this equipment. Your facility must establish written guidelines for preventative maintenance and keep written or online records of the maintenance performed on these products. As a minimum, the items presented in the SAFETY section of this document and the items that follow here, should be included in your maintenance program.

- Cables (if equipped)—inspect end fittings daily for wear. Inspect the entire length of the cable weekly. Replace cables at the first sign of wear and on an annual basis. If the cable tension has been adjusted, be certain that the cable nut is tight.
- Nuts, bolts, and fasteners—check tightness weekly. If any hardware has become loose, retighten and/or use Loctite® brand Threadlocker 242. Be sure all hardware is tight before using the machine.
- Safety catches—inspect catches, stop rods and their associated fasteners. Tighten any loose hardware and replace any components at first signs of wear.
- Frames—sweat, disinfecting sprays and spills can lead to corrosion which may lead to premature failure of components. Wipe all machines down with a damp cloth and dry completely each day. This includes painted parts, chrome parts and upholstered pads.
- Painted and chrome plated parts—use Simple Green with a dilution of 32:1 or similar cleaner for light dirt and grime. Use Turtle Wax Polishing Compound or a good car polish to remove heavier dirt and grease as well as for polishing. DO NOT use solvents, lacquer thinner, acetone or finger nail polish remover. For scuffs and marks that are not removed by the above methods use a soft scrub cleanser. Make sure all parts are dry upon completion.
- Weight stack enclosures (shrouds) (if equipped)—wipe down with a damp cloth as needed.
- Exercise instruction labels—clean with soap and water as needed.
- Guide rods (if equipped)—wipe all dirt and dust from the guide rods before applying a light application of Tri-Flow™ or other teflon spray lubricant. Spray the Tri-Flow™ on a rag and then wipe the guide rods with the rag. **DO NOT** use oil lubricants such as WD-40.

  ⚠ **CAUTION:** Tri-Flow™ will stain carpet and clothing.
- Bronze bushings—check monthly for signs of wear and replace as needed.
- Linear bearing shafts—wipe any accumulation of dust or other contaminants from the shafts on a weekly basis. Apply a thin layer of a Teflon® (PTFE) grease on a weekly basis. TRUE recommends Magnalube® brand.
- When replacing any component, use only TRUE supplied parts.
- Be sure all hardware is tight before using the machine.

Retain these instructions for future reference. If you have any questions, do not hesitate to contact your TRUE dealer or TRUE product support (service@truefitness.com | 800.883.8783).

COMMERCIAL MAINTENANCE SCHEDULE

Commercial Maintenance Schedule					
	Daily	**Weekly**	**Monthly**	**6 Months**	**Annually**
Inspect cables for wear, tension, and proper connection if equipped. Replace at the first sign of wear.	X				
Inspect cable length and cable end fittings. Replace at the first sign of wear.		X			
Inspect all nuts and bolts and tighten if needed.		X			
Inspect safety catches, stop rods, and their fasteners. Replace at the first sign of wear.	X				
Inspect all anti-slip surfaces and replace as needed.		X			
Inspect all adjustment pins, weight stack pins, set screws, gas shocks, snap links, and pulleys if equipped.	X				
Inspect all accessory bars and handles.		X			
Inspect all safety and instructional decals.	X				
Inspect all weight stack shields if equipped.	X				
Clean guide rods and lubricate with a teflon lubricant if equipped.		X			
Clean and condition upholstery.	X				
Clean and polish frame.	X				
Clean and polish chrome.	X				
Lubricate pivot bearings and linear bearings.				X	
Replace cables if equipped.					X

COMPLIANCES

This equipment complies with all applicable codes and regulations. For a complete list of compliances, please visit www.truefitness.com.

DIMENSIONS AND WEIGHTS

- **ASSEMBLED DIMENSIONS (L X W X H)**
  58" x 41" x 58" / 147 cm x 104 cm x 147 cm
- **PRODUCT WEIGHT**
  Metal Shrouds - 460 lbs / 209 kg
  Acrylic Shrouds - 437 lbs / 199 kg
- **MAXIMUM USER WEIGHT**
  300 lbs / 136 kg
- **WEIGHT STACK OPTIONS**
  190 lbs / 87 kg
  250 lbs / 114 kg
  310 lbs / 141 kg

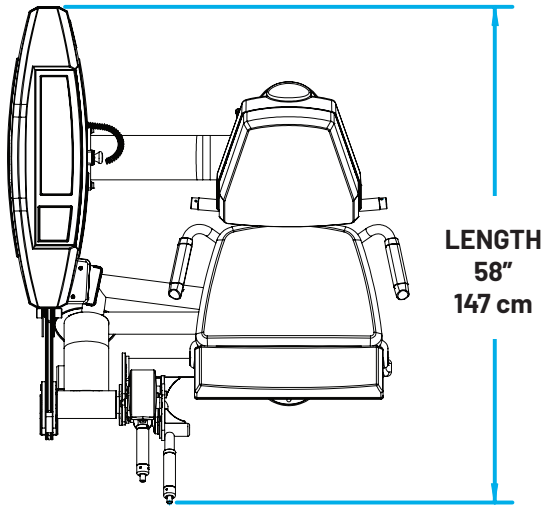

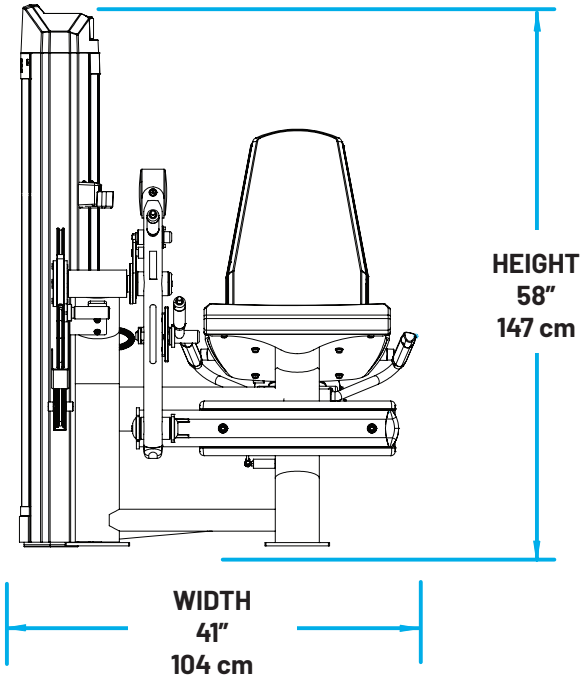

SHROUD OPTIONS

Shroud Options			
		Shrouds	
Model	Description	Acrylic	Metal
SPL0100	Leg Extension	SPLSRDPS 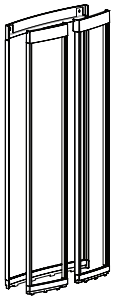	SPLSRDMS 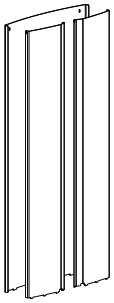

WEIGHT STACK CONFIGURATIONS

Weight Stack Configuration								
		Number of Weight Plates*			Number of Bumpers			Top Weight
Model	Description	Light (L)	Standard	Heavy (H)	Light (L)	Standard	Heavy (H)	Generation 2
SPL0100	Leg Extension	12 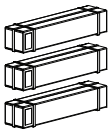	16 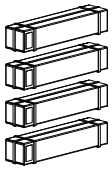	20 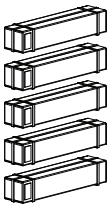	6	4	2	SPL-00-TPL300X 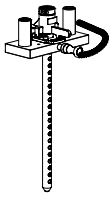
* One box contains four 15lb / 6.8kg weight plates. 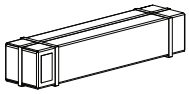 = 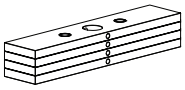								SPL-ADRWT REV03 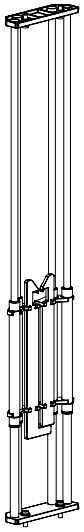

WARNING AND INTENDED USE LABELS

WARNING: Replace all labels that may be worn, damaged, or missing.

To replace any worn or missing decals contact TRUE product support (service@truefitness.com | 800.883.8783).

TRUE

TRUE FITNESS TECHNOLOGY, INC

MODEL NO: SPL0100

SERIAL NO: 25-SPL0100000

SPL-00-LBLSN

MAINTENANCE SCHEDULE

Check integrity and function of following items.
Replace all worn components immediately.

		DAILY	WEEKLY
Cables:	• Tension, end fittings, and coating. • Weight stack locking nut. Max height from under bolt head to top of nut is 1" (2.5cm). • Replace cables annually.	x	x
Upholstery:	• Wipe down and dry. • Clean and condition.	x	x
Frame:	• Wipe with damp cloth and dry • DO NOT leave damp. Polish/Wax	x	x
Chrome:	• Wipe with damp cloth and dry • DO NOT leave damp. Polish/Wax	x	x
Nuts/Bolts/Fasteners:	• Check Tightness		x
Guide Rods:	• Clean and lubricate		x
Adjustments/Locking Pins/Knobs			x
Weight Stack Pin		x	
Warning/Instruction Labels			x
Springs		x	
Anti-Skid		x	
Hand Grips		x	

ASTM 1749 LBL-WRN-SPLMAINT

LBL-WRN-SPLMAINT

WARNING

SERIOUS INJURY CAN OCCUR ON THIS EQUIPMENT IF THE PIN IS NOT COMPLETELY INSERTED BEFORE USE.

P/N B2065 ASTM F1749

B2065

MAXIMUM Height from bottom of Nut to Bolt Head. MAKE SURE locking nut is tight.

MAX 1¼"

LBL-WRN-SPL021 REV01

LBL-WRN-SPL021

WARNING

SERIOUS INJURY CAN OCCUR ON THIS EQUIPMENT. FOLLOW THESE PRECAUTIONS TO HELP AVOID INJURY.

1. BEFORE USING: Read and understand all of the warnings and obtain instruction on the use of this machine. DO NOT modify the machine.
2. Get a medical exam before beginning an exercise program.
3. Keep body and clothing clear of all moving parts. DO NOT wear anything loose or dangling.
4. Inspect the machine before use. DO NOT use if it appears damaged. DO NOT try to fix any machine. Notify staff immediately.
5. INSPECT MACHINE DAILY for loose, worn or damaged parts. Replace any part or label at first signs of wear. Inspect all cables and their connections closely. If you are in doubt about any part, DO NOT use the machine until the part is replaced.
6. Inspect all cables and connections before using the machine. DO NOT use this machine if any part appears worn or damaged.
7. Be certain that weight pin is completely inserted. Use only the pin provided by the manufacturer. If unsure, seek assistance.
8. NEVER pin weights or top plate into an elevated position. DO NOT use the machine if found in this condition. DO NOT try to fix. Seek assistance.
9. Use only the incremental weights supplied by the manufacturer. DO NOT use dumbbells or other means to add resistance to machine.
10. NEVER allow children near this machine. Supervise teenagers.
11. DO NOT REMOVE THIS LABEL. REPLACE IF DAMAGED.

ASTM F1749 LBL-WRN-SPL01

LBL-WRN-SPL01

WARNING

DAMAGE TO MACHINE WILL OCCUR IF KNOB IS ADJUSTED WHILE USING MACHINE.

LBL-WRN-SP022

LBL-WRN-SPL022

TRUE

WARNING AND INTENDED USE LABELS

LBL-ADJ-SPL001

LBL-ADJ-SPL005

LBL-ADJ-SPL035
Generation 2

LBL-ADJ-SPL004

LBL-ADJ-SPL010

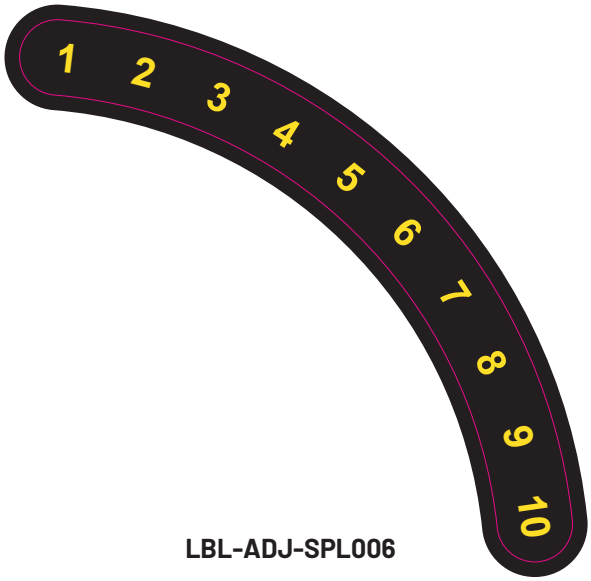

LBL-ADJ-SPL006

LBL-QR-SPL0100

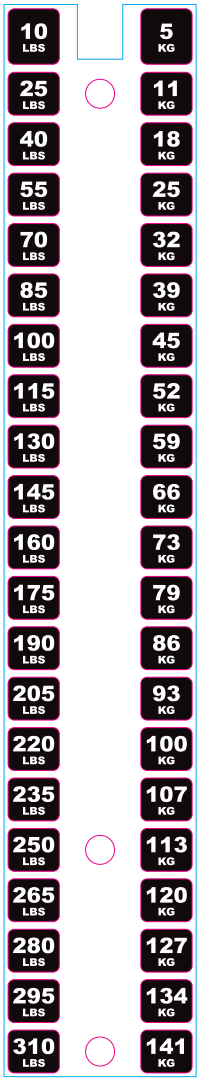

LBL-WS-SPL310

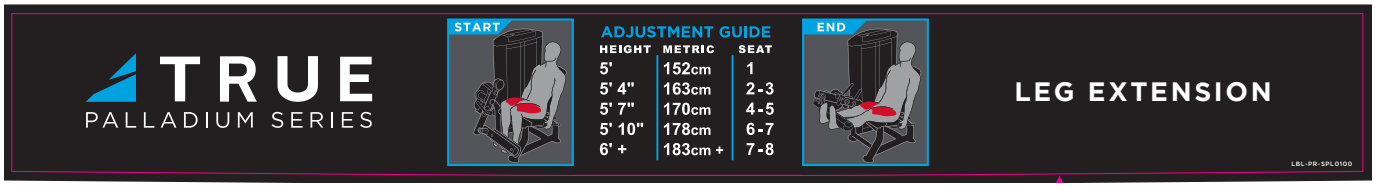

LBL-PR-SPL0100

ASSEMBLY INSTRUCTIONS

PREASSEMBLY CHECKLIST

⚠ CAUTION:

Use caution when assembling this product.
Unpacking and assembling this product requires two or more people.

Use caution when unpacking this product. Avoid damage to the product and product pads.
DO NOT use a box cutter. DO NOT slice into the packaging.

VERIFY BOX CONTENTS

IMPORTANT! Please verify all box contents. If you have questions, or if there are any missing parts, contact product support (service@truefitness.com | 800.883.8783).

TOOLS NEEDED FOR ASSEMBLY		INCLUDED IN BOX
#2 Phillips Screwdriver		NO
Flat Head Screwdriver		NO
3/32″ Allen Wrench		NO
1/8″ Allen Wrench		NO
5/32″ Allen Wrench		NO
3/16″ Allen Wrench		NO
5/16" Allen Wrench		NO

TOOLS NEEDED FOR ASSEMBLY		INCLUDED IN BOX
7/32″ Allen Wrench		NO
Wrench		NO
Socket Wrench Set		NO
Rubber Mallet		NO
Cloth		NO
Lubricant		NO

THIS PRODUCT SHIPS IN MULTIPLE CARTONS.
ENSURE YOU HAVE ALL PARTS SHOWN BEFORE ASSEMBLING THE EQUIPMENT.

NOTE: Supplemental unboxing video available on vimeo.com: https://vimeo.com/723498648?share=copy.

BOX CONTENTS

ITEM	PART NUMBER	DESCRIPTION	QTY
1	SPL-01-MFR350X	MAIN FRAME ASSEMBLY	1
2	SPL-01-UPR300X	UPRIGHT ASSEMBLY	1
3	SPL-00-RCK001	HOLDER, PHONE	1
4	SPL01PDKT	KIT, SPL0100 PAD	1
5	SPL-00-CVR021	CAP, UPRIGHT	1
6	SPL-00-CVR022	TRAY, UPRIGHT COVER	1
7	SPL-01-CBL100	CABLE ASSEMBLY	1
8*	SPLSRDPS*	SHROUD SET SHORT ACRYLIC, SPL	1*
9*	SPLSRDMS*	SHROUD SET, SPL, SHORT METAL	1*
10	SPL-00-GRD101X	GUIDE ROD ASSEMBLY	2
11**	SPL-00-WBR002**	WEIGHT STACK BUMPER	6**
12	SPL-00-TPL300X	SUBASSEMBLY, TOP WEIGHT - GENERATION 2	1
13**	SPLBX15**	SUBASSEMBLY, SPL WEIGHT PLATES 4X15LB	4**
14	MAN-SPL0100	MANUAL, SPL0100	1

*Acrylic or metal shrouds are dependent on the configuration that was ordered.

**Weight stack and bumper quantities are dependent on the weight configuration that was ordered.

IMPORTANT! The back pad assembly includes the back pad and tray.

NOTE: The part numbers listed do not include the color designation code, which is appended as a suffix. If you have a matte black model, -35 is added to the end of any part number affected by color. For example, frame or upright assemblies and subassemblies.

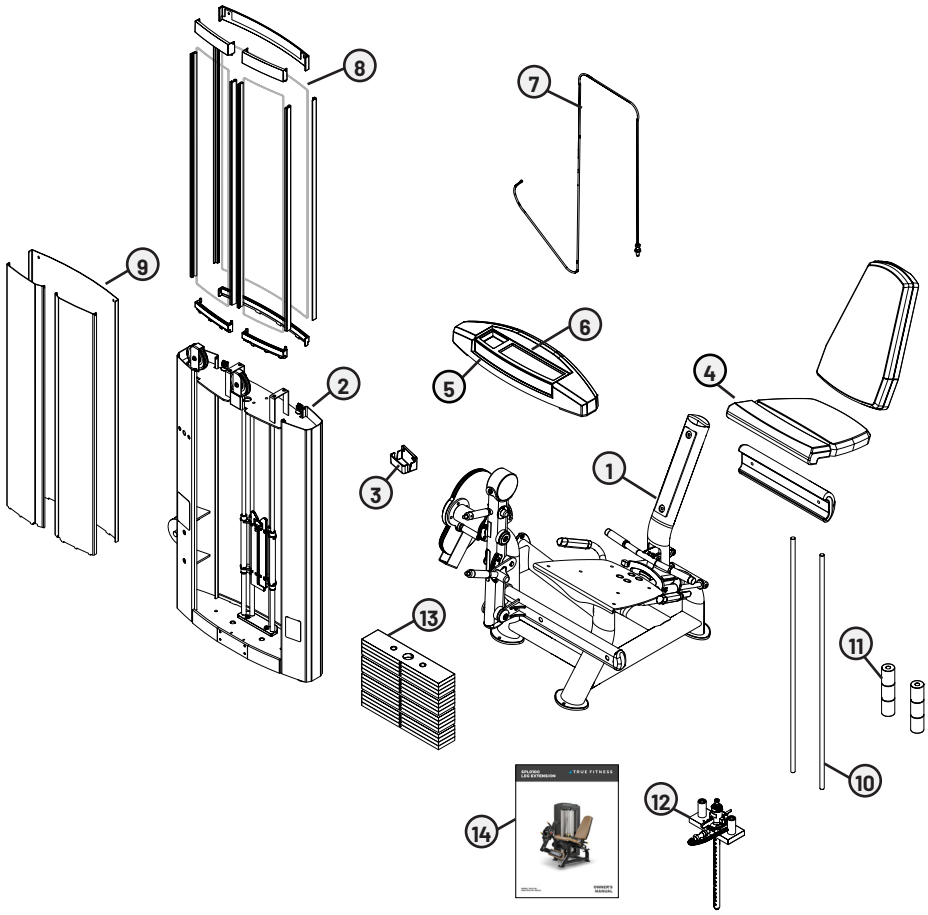

ASSEMBLY STEPS

STEP 1—ATTACH MAIN FRAME ASSEMBLY TO UPRIGHT ASSEMBLY

NOTE: Supplemental assembly video available on vimeo.com: https://vimeo.com/723456483?share=copy.

TOOL NEEDED	
Allen Wrench	

ITEM	PART	DESCRIPTION	QTY
1	SPL-01-MFR350X	MAIN FRAME ASSEMBLY	1
2	SPL-01-UPR300X	UPRIGHT ASSEMBLY	1
3	C 623A	SHCS, 3/8"-16, 1" BLK ZP	6
4	C 749B	LOCK WASHER, 3/8", BLK ZP	6
5	C 754B	WASHER, FLAT, 3/8" SAE, BLK	4

A. Using an allen wrench, remove the 6 hex screws, 6 lock washers, and 4 flat washers from the upright assembly.

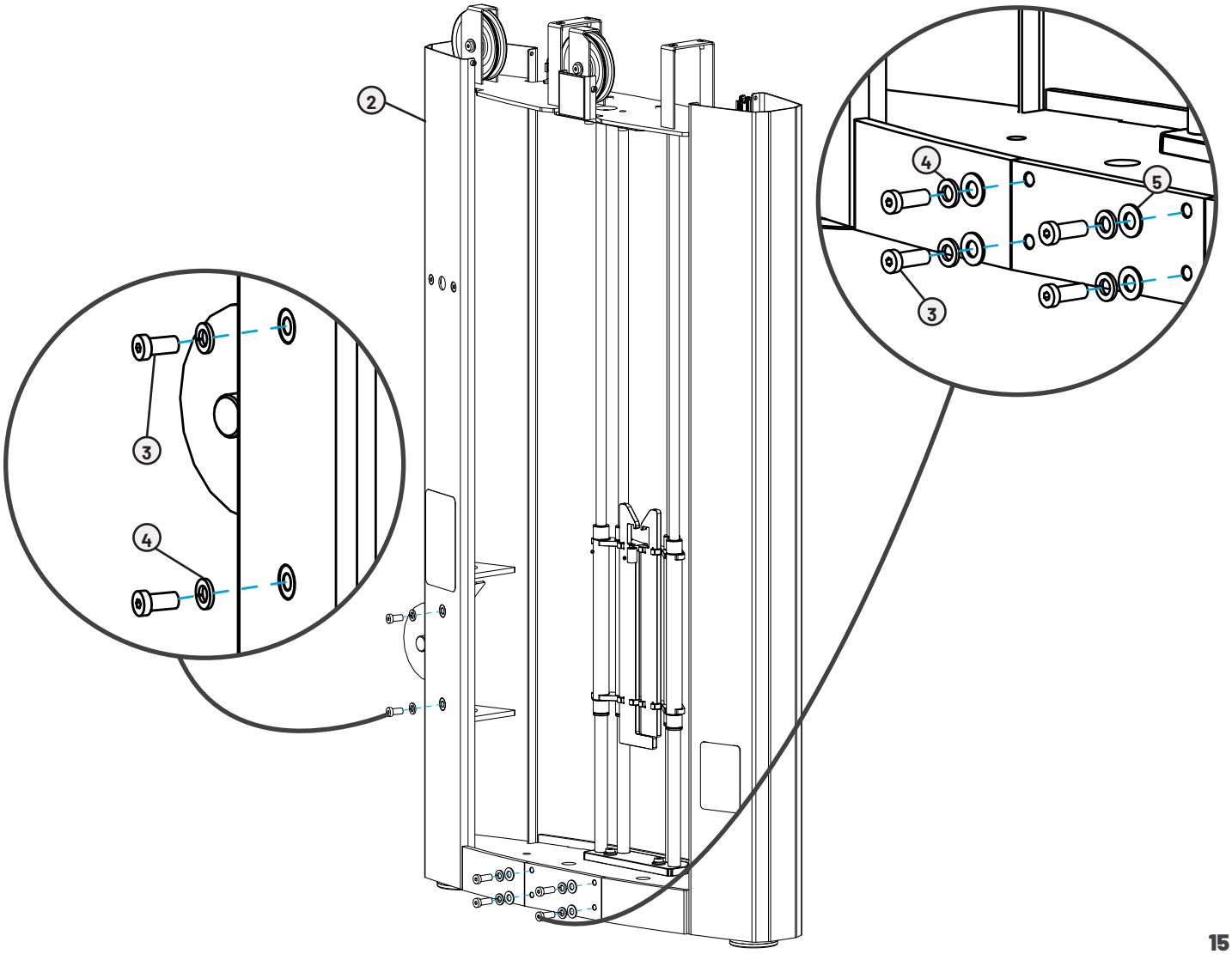

STEP 1—ATTACH MAIN FRAME ASSEMBLY TO UPRIGHT ASSEMBLY CONTINUED

B. Align the main frame assembly with the upright assembly. Using an allen wrench, attach the main frame assembly to the upright assembly using the 6 hex screws, 6 lock washers, and 4 flat washers you removed previously.

NOTE: To help align parts, loosely attach all screws before fully tightening.

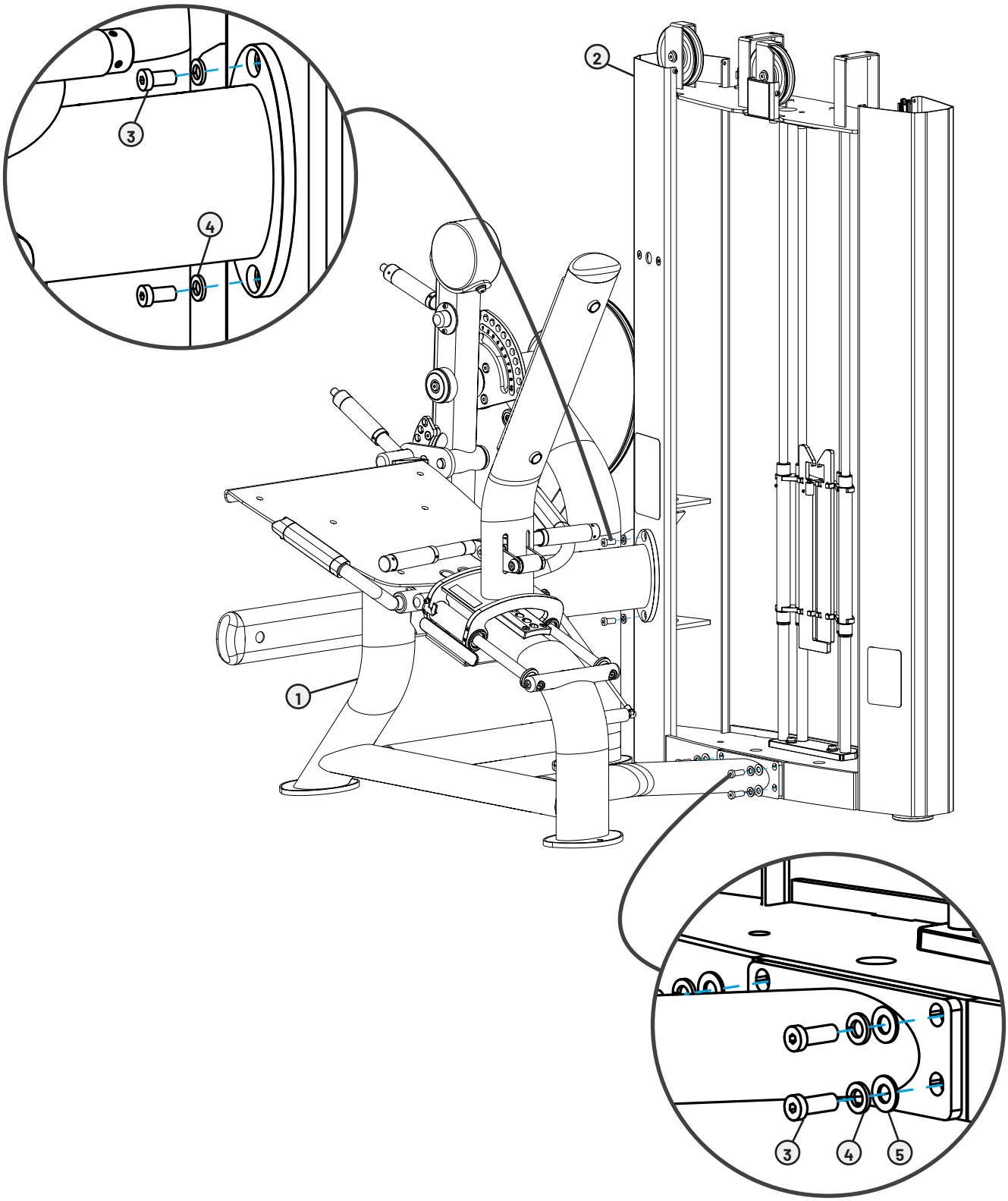

STEP 2—ROUTE CABLE THROUGH UPRIGHT AND MAIN FRAME ASSEMBLIES

TOOLS NEEDED	
Allen Wrench	
Wrench	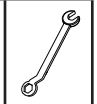
Socket Wrench	

ITEM	PART	DESCRIPTION	QTY
1	SPL-01-UPR300X	UPRIGHT ASSEMBLY	1
2	SPL-01-MFR350X	MAIN FRAME ASSEMBLY	1
3	SD0183	PULLEY 114MM	3
4	SPL-01-CAM001	LEG EXT CAM	1
5	SPL-01-CAP201	CAP, CAM	1
6	SPL-01-CBL100	CABLE ASSEMBLY	1
7	SPL-00-CBL001	CABLE BLOCK	1
8	C1258	LPSHCS, 3/8"-16 X 1-3/4" E-COAT	2
9	C 742D	LOCK NUT, 3/8"-16, NYL, JAM, THIN, BLK E COAT	2
10	C 754B	WASHER, FLAT, 3/8" SAE, BLK	4
11	C1260	LPSHCS, 3/8"-16 X 2" E-COAT	1
12	C 749B	LOCK WASHER, 3/8", BLK ZP	6
13	C1259	LPSHCS, 3/8"-16 X 1-1/2" E-COAT	4
14	C 623A	SHCS, 3/8"-16, 1" BLK ZP	1

NOTE: The cable is routed through the upright assembly to the cam assembly. The left end of the cable goes to the cam side while the right end goes to the weight stack side.

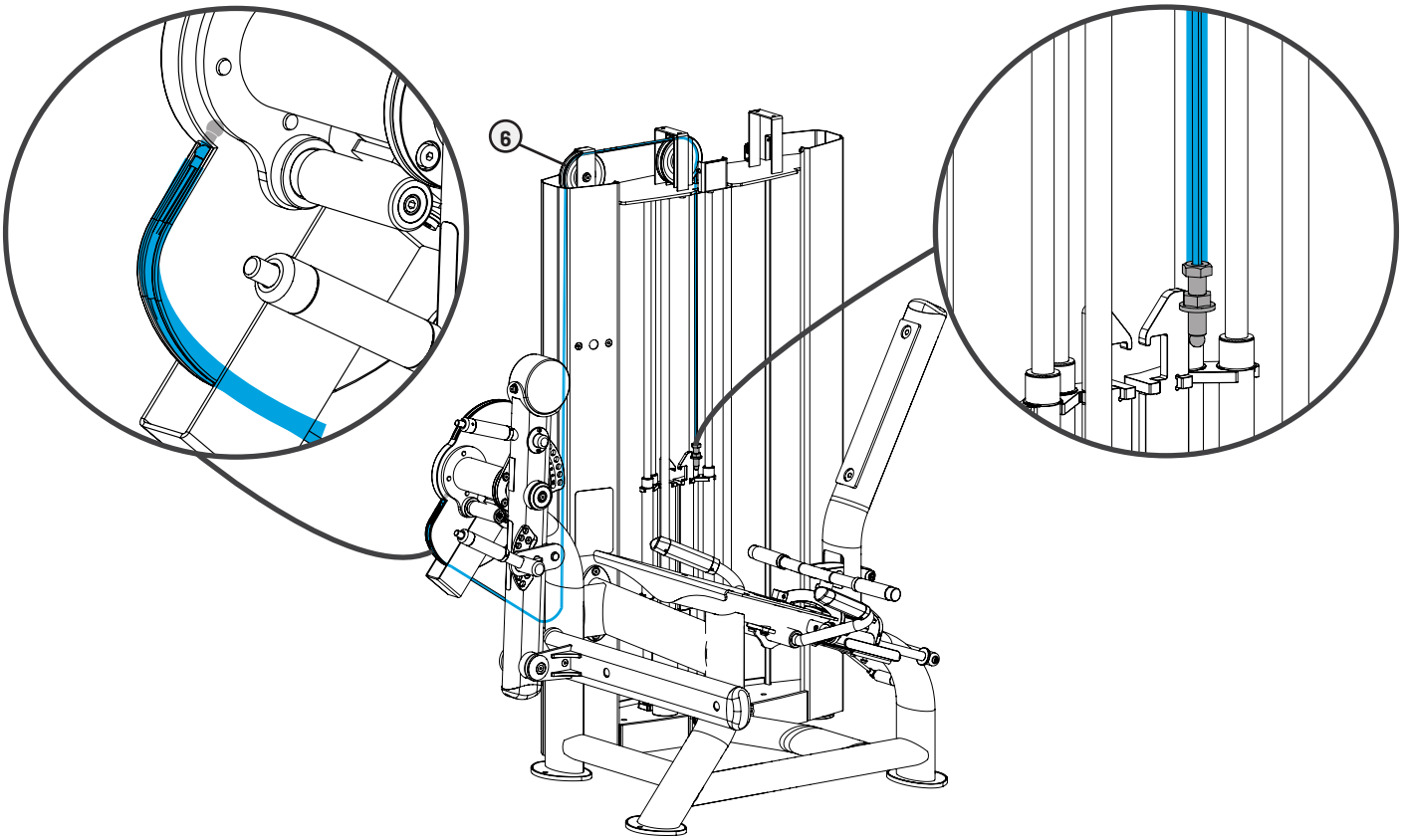

STEP 2—ROUTE CABLE THROUGH UPRIGHT AND MAIN FRAME ASSEMBLIES CONTINUED

A. Using an allen wrench and a socket wrench or open end wrench, remove and set aside the top upright pulleys using 2 hex screws, 4 flat washers, and 2 lock nuts.

B. Using an allen wrench, remove and set aside the lower upright pulley using 1 hex screw and 1 lock washer.

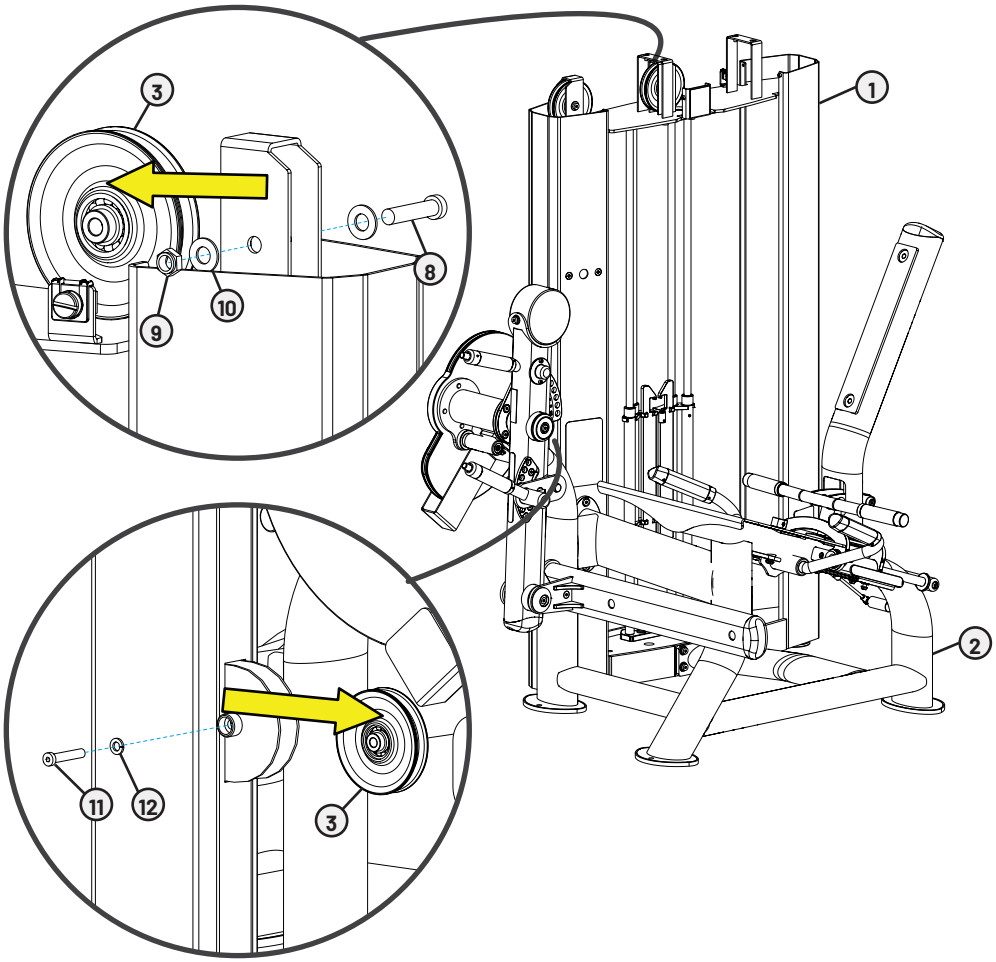

STEP 2—ROUTE CABLE THROUGH UPRIGHT AND MAIN FRAME ASSEMBLIES CONTINUED

C. Route the cable through the top of the upright assembly and around the pulleys.

D. Using an allen wrench and a socket wrench or open end wrench, reattach the top upright pulleys using 2 hex screws, 4 flat washers, and 2 lock nuts.

E. Route the cable through the lower opening of the upright assembly and around the pulley.

F. Using an allen wrench, reattach the lower upright pulley using 1 hex screw and 1 lock washer.

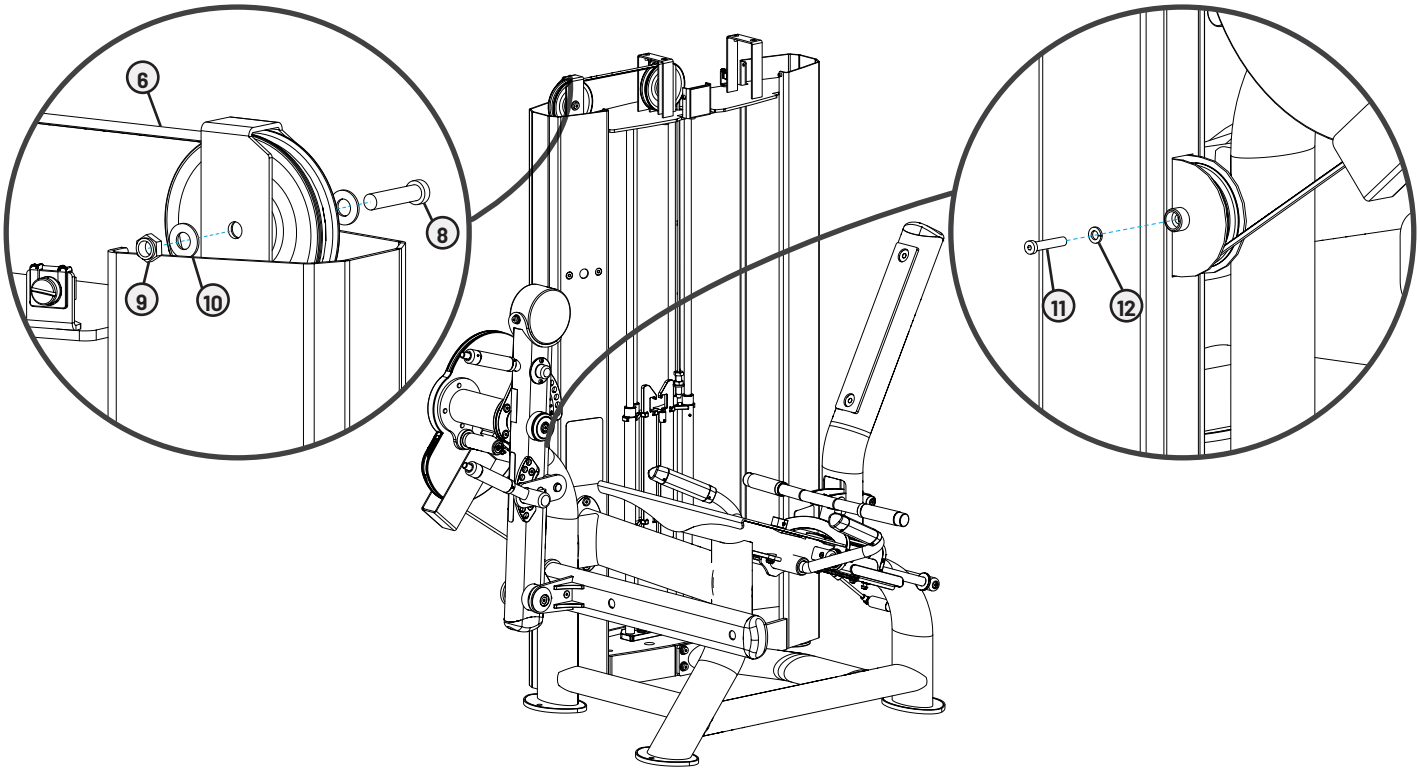

STEP 2—ROUTE CABLE THROUGH UPRIGHT AND MAIN FRAME ASSEMBLIES CONTINUED

G. Using an allen wrench, remove and set aside the cam assembly and cable block using 4 hex screws, 5 lock washers, and 1 shorter hex screw.

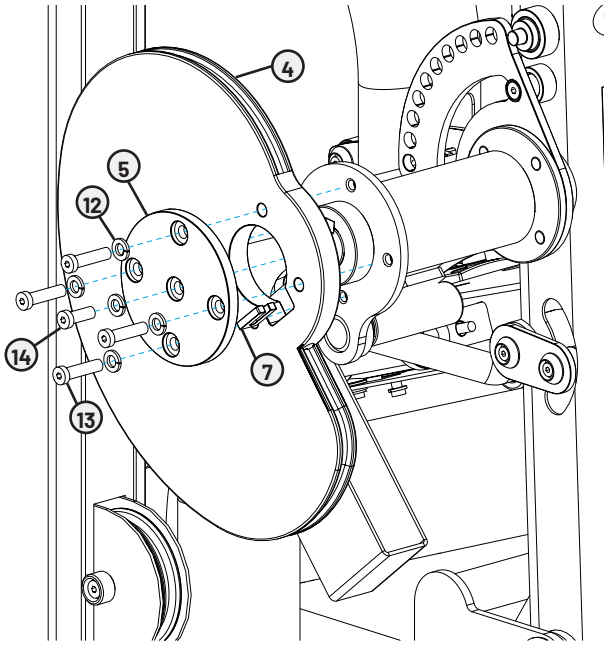

H. Route the cable around and through the cam assembly and secure it to the cable block.

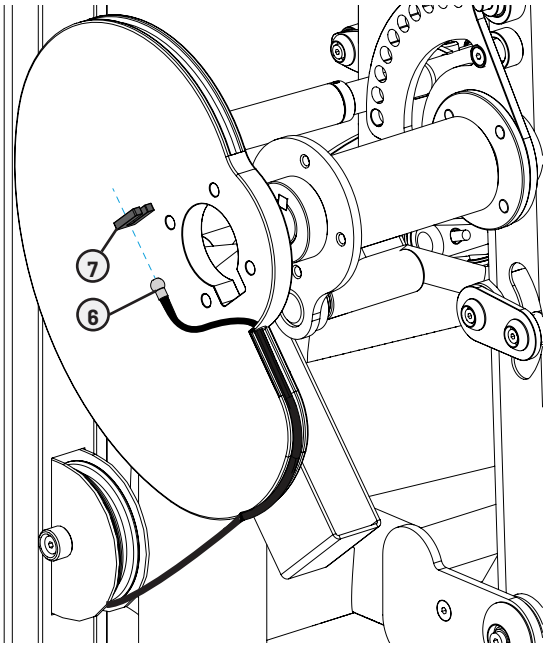

I. Using an allen wrench reattach the cam assembly using 4 hex screws, 5 lock washers, and 1 shorter hex screw.

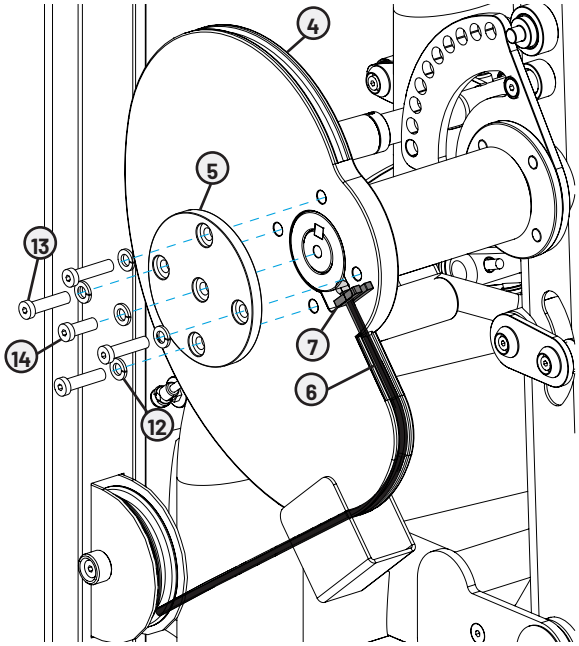

STEP 3—ATTACH WEIGHT STACK TO UPRIGHT ASSEMBLY

NOTE: Supplemental weight stack video available on vimeo.com: https://vimeo.com/773978716?share=copy.

TOOLS NEEDED	
Allen Wrench	
Wrench	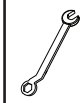
Cloth	
Lubricant	

ITEM	PART	DESCRIPTION	QTY
1	SPL-01-UPR300X	UPRIGHT ASSEMBLY	1
2	SPL-00-GRB001	BRACE, GUIDE ROD	1
3*	SPLBX15*	SUBASSEMBLY, SPL WEIGHT PLATES 4X15LB	4*
4	SPL-00-TPL300X	SUBASSEMBLY, TOP WEIGHT - GENERATION 2	1
5	SPL-00-GRD101X	GUIDE ROD ASSEMBLY	2
6*	SPL-00-WBR002*	WEIGHT STACK BUMPER	6*
7	SPL-00-PIN030X	SUBASSEMBLY, SELECTORY PIN	1
8	SPL-01-CBL100	CABLE ASSEMBLY	1
9	D1261	CABLE BOLT FTG, 1/2-13 X 1-3/4"	1
10	C 623A	SHCS, 3/8"-16, 1" BLK ZP	2
11	C 749B	LOCK WASHER, 3/8", BLK ZP	2
12	C 754B	WASHER, FLAT, 3/8" SAE, BLK	2
13	C 603A	SHCS, 10-32, 1/2" BLK	1
14	C 900B	LOCK WASHER, #10 MED SPLIT, BLK	1
15	C 900A	WASHER, FLAT, #10 USS, ZP (.0028#)	1
16	LBL-WS-SPL310	LABEL, SPL WEIGHT STACK LABEL 310LBS 20 PLATE	1

*Weight stack and bumper quantities are dependent on the weight configuration that was ordered.

STEP 3—ATTACH WEIGHT STACK TO UPRIGHT ASSEMBLY CONTINUED

A. Using an allen wrench, remove and set aside the guide rod bracket from the upright assembly using 2 hex screws, 2 lock washers, and 2 flat washers.

B. Slide the 2 guide rods into place on the upright assembly.

C. Wipe all dirt and dust from the guide rods before lightly applying Tri-Flow™ or another teflon spray lubricant. Spray the Tri-Flow™ on a cloth or paper towel and use it to wipe down the guide rods.

IMPORTANT! DO NOT use oil lubricants such as WD-40.

IMPORTANT! Tri-Flow™ will stain carpet or clothing.

D. Slide the bumpers, weights, and top weight assembly down the guide rods.

IMPORTANT! DO NOT drop the weight plates when sliding onto guide rods.

IMPORTANT! Adjust the adder weight selection knob to 0lbs/kg prior to installing the top weight assembly.

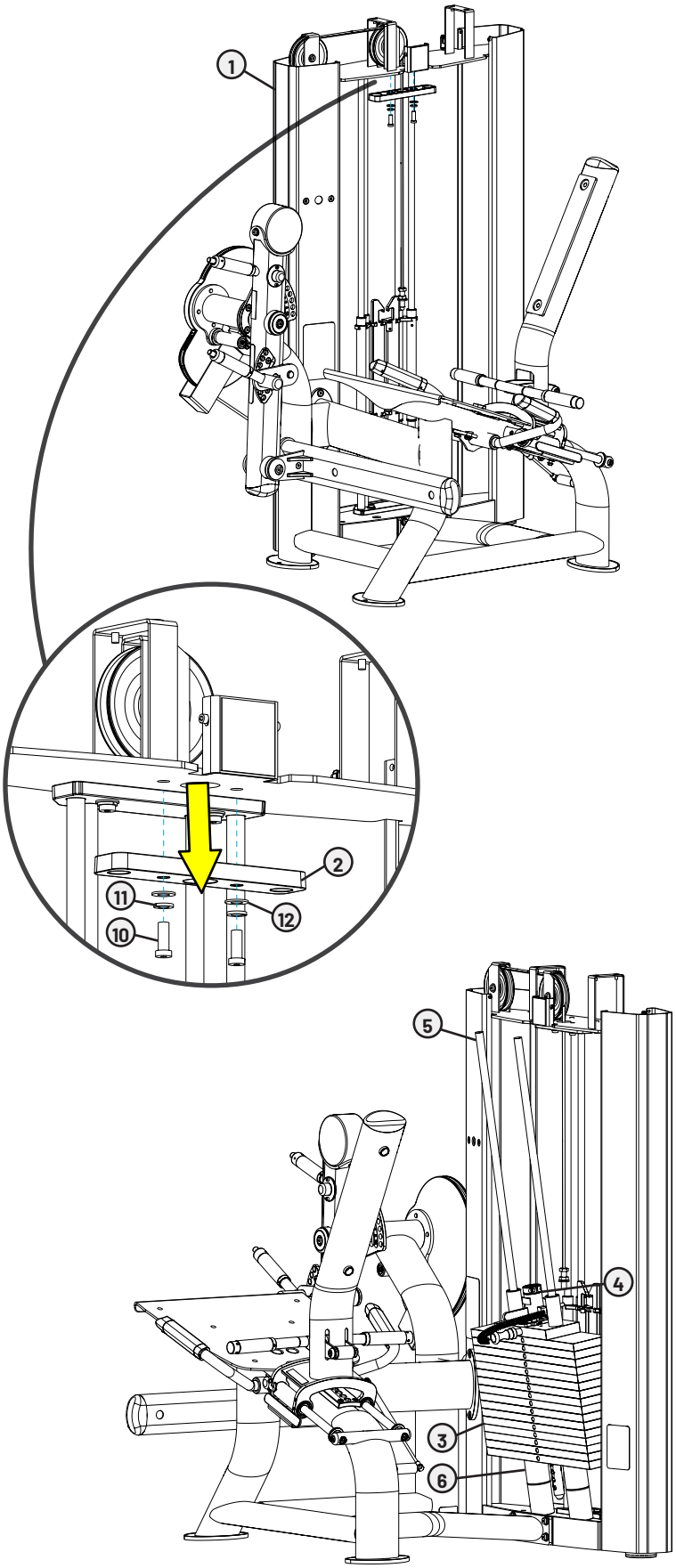

STEP 3—ATTACH WEIGHT STACK TO UPRIGHT ASSEMBLY CONTINUED

E. Using an allen wrench, reattach the guide rod bracket to the upright assembly using 2 hex screws, 2 lock washers, and 2 flat washers.

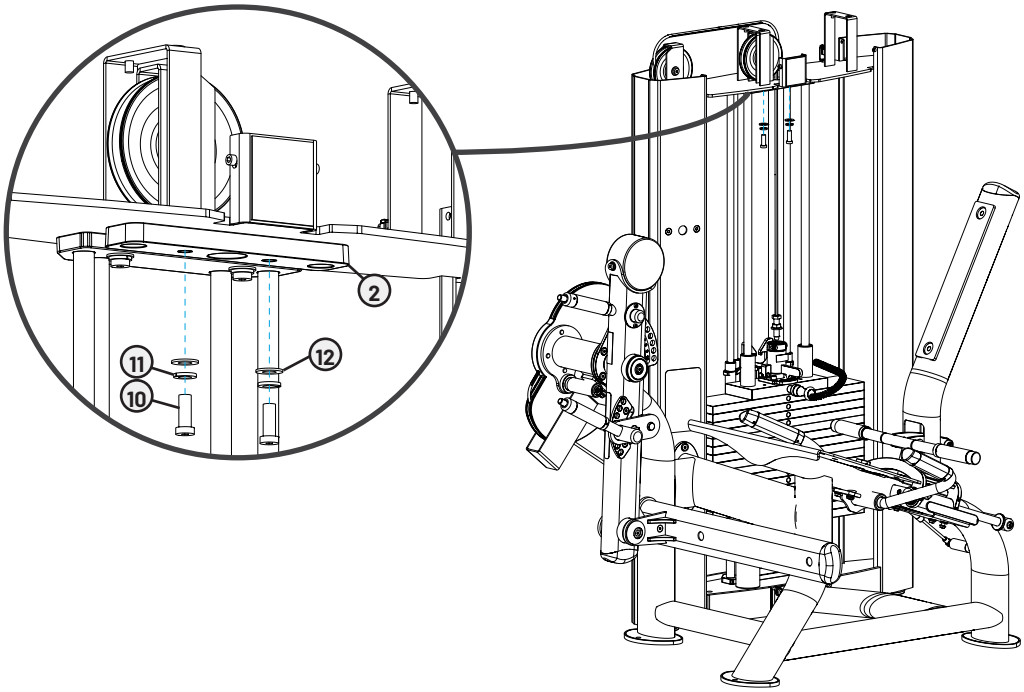

STEP 3—ATTACH WEIGHT STACK TO UPRIGHT ASSEMBLY CONTINUED

F. Insert the selector pin and route the cable down through the hole on the upright assembly. Using an open end wrench, attach the cable bolt to the top weight assembly.

IMPORTANT! A minimum of 1/2" (12.7 mm) of the threaded portion of the cable bolt must be threaded into the top weight assembly. Make sure locking nut is tight.

NOTE: Verify the selector pin slides in and out of each weight plate.

G. Using an allen wrench, remove the 1 hex screw, 1 lock washer, and 1 flat washer from the top right attachment point of the top weight assembly.

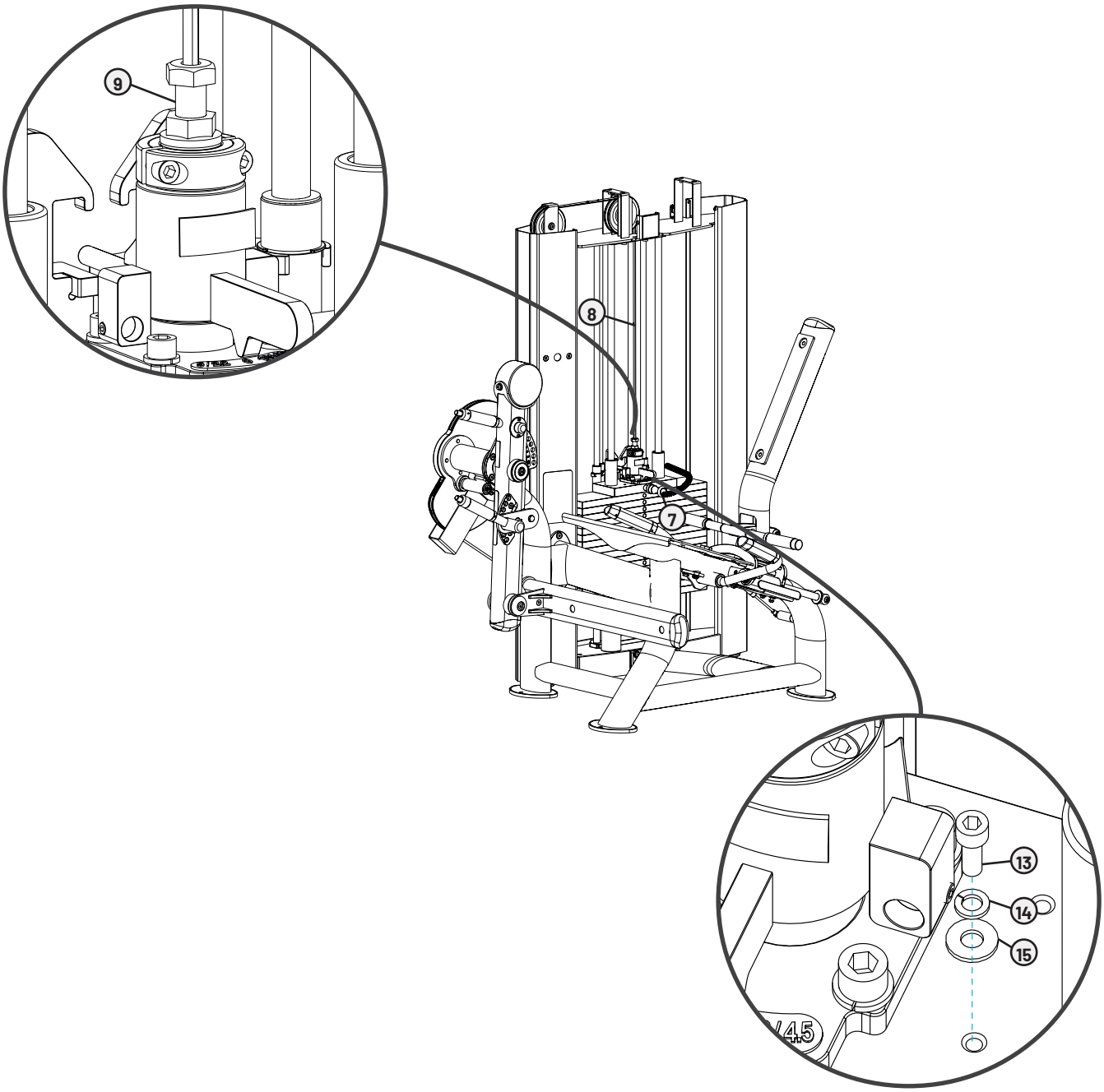

STEP 3—ATTACH WEIGHT STACK TO UPRIGHT ASSEMBLY CONTINUED

H. Insert the hex screw through the lock washer, flat washer, and selector pin attachment and reattach it to the top weight assembly using an allen wrench.

I. Using a degreaser and cloth, remove oil from the weight plates that was applied for anti corrosion during the manufacturing process.

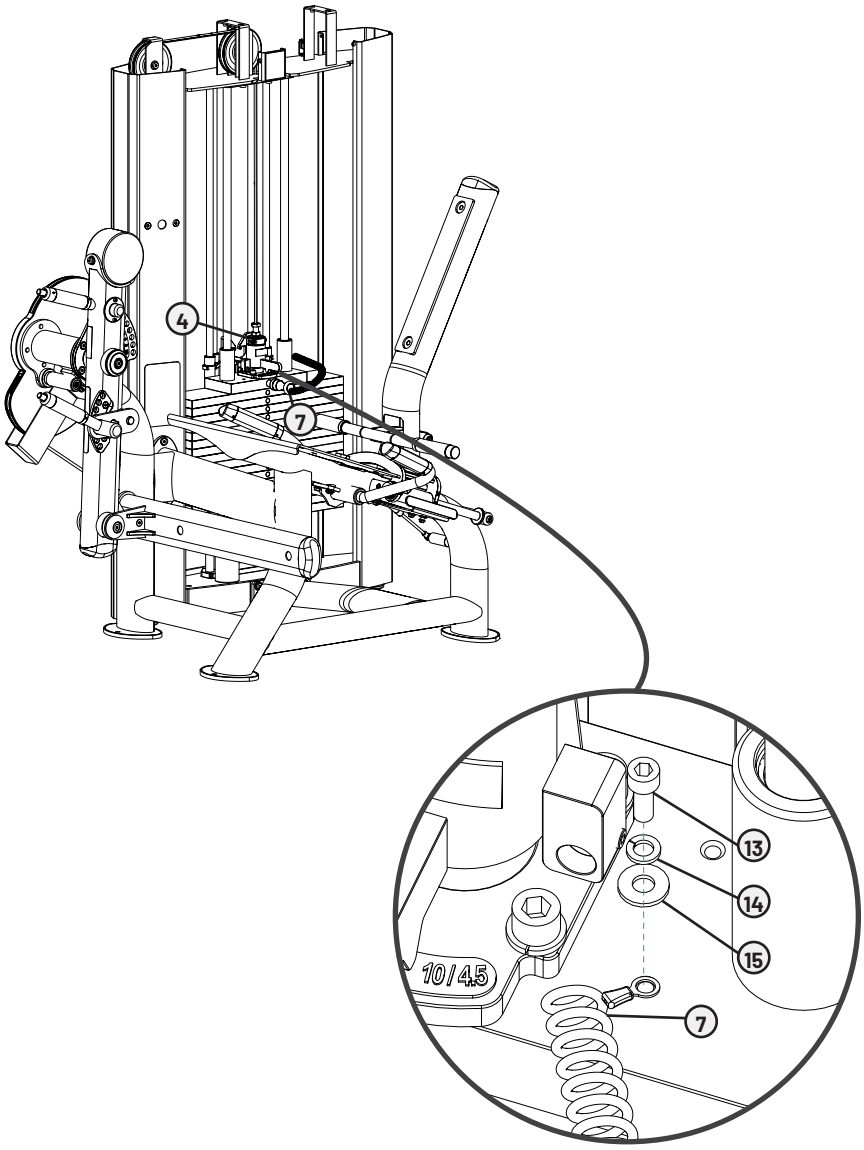

STEP 3—ATTACH WEIGHT STACK TO UPRIGHT ASSEMBLY CONTINUED

J. After selecting the appropriate weight stack label, peel and remove the backing from the weight stack label. Using the selector pin retainer tube and the selector pin in the heaviest weight plate option, align the weight stack label with the plates. After applying the weight stack label for the appropriate model and weight stack option, peel and remove the front from the weight stack label, leaving the individual weight call outs for each plate.

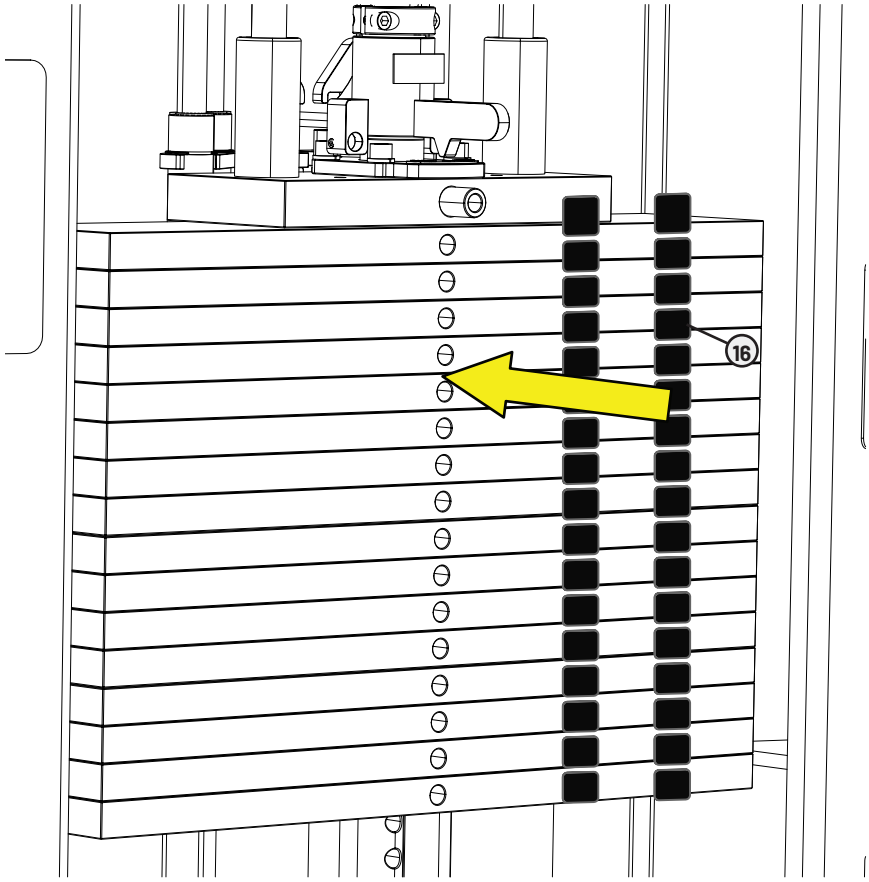

STEP 4—ATTACH ACRYLIC SHROUDS TO UPRIGHT ASSEMBLY

NOTE: Supplemental acrylic shroud video available on vimeo.com: https://vimeo.com/723539522?share=copy.
NOTE: Supplemental metal shroud video available on vimeo.com: https://vimeo.com/774417897?share=copy.

TOOLS NEEDED	
Allen Wrench	
Flat Head Screwdriver	
Rubber Mallet	
Socket Wrench	
Wrench	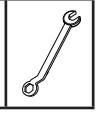

ITEM	PART	DESCRIPTION	QTY
1	SPL-01-UPR300X	UPRIGHT ASSEMBLY	1
2*	SPLSRDPS*	SHROUD SET SHORT ACRYLIC, SPL	1*
3*	SPLSRDMS*	SHROUD SET, SPL, SHORT METAL	1*
4	C 603A	SHCS, 10-32, 1/2" BLK	4
5	C 900E	LOCK NUT, 10-32, NYL INS BLK	4
6	D2157	SCREW, TWIST LOCK	2
7	D2158	LOCK WASHER	2

*Acrylic or metal shrouds are dependent on the configuration that was ordered.

A. Using an allen wrench, socket wrench or open end wrench, and a flat head screwdriver, remove and set aside the shroud fasteners from the upright assembly using 4 hex screws, 4 lock nuts, 2 twist lock screws, and 2 lock washers.

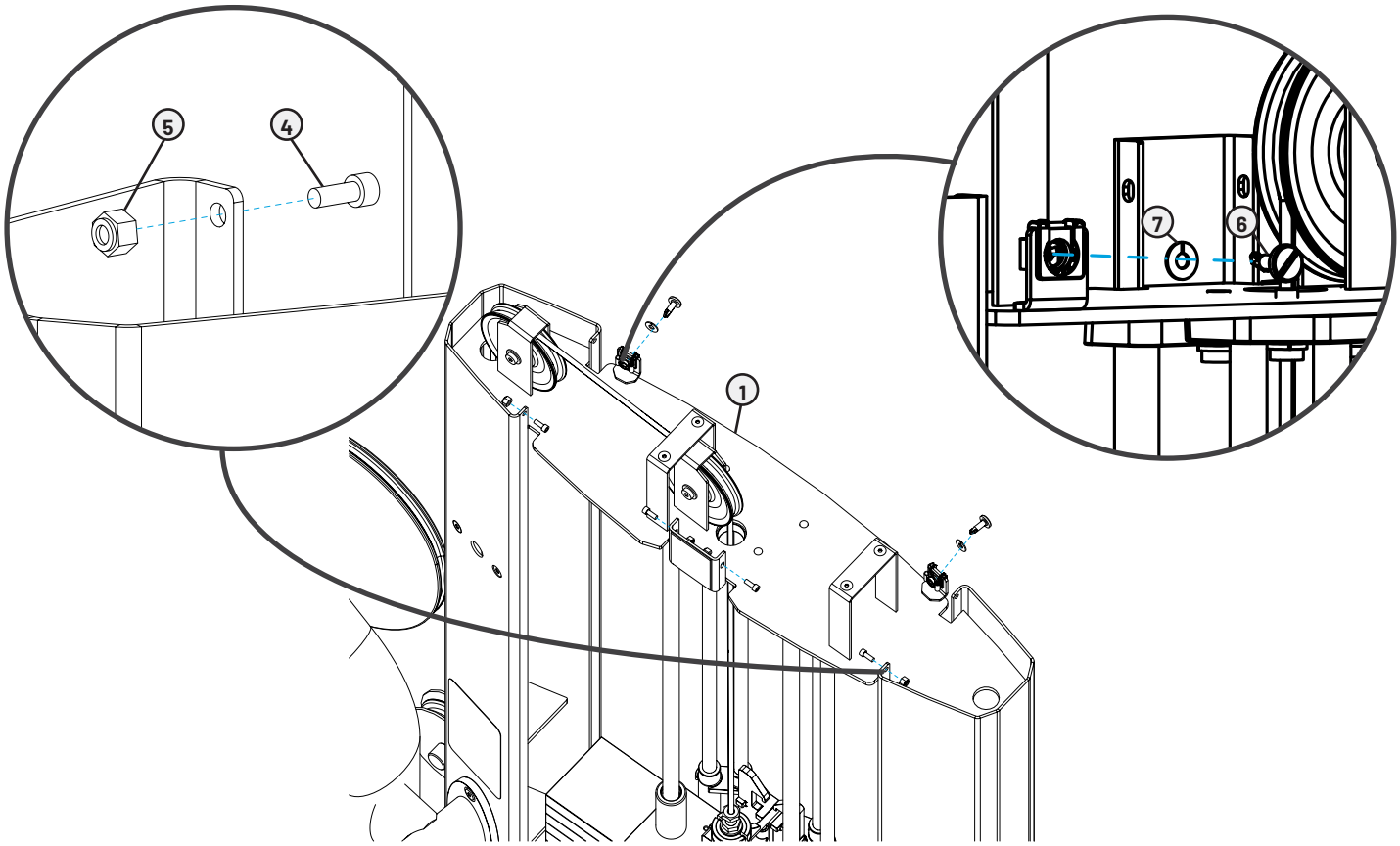

STEP 4—ATTACH ACRYLIC SHROUDS TO UPRIGHT ASSEMBLY CONTINUED

B. Assemble the acrylic front shrouds and insert them into the upright assembly using a rubber mallet.

C. Using an allen wrench and a socket wrench or open end wrench, insert and tighten the 4 hex screws and 4 lock nuts into the front shrouds.

D. Assemble the acrylic rear shroud and insert it into the slots of the upright assembly.

E. Using a flat head screwdriver, insert and tighten the 2 twist lock screws and 2 lock washers into the rear shroud.

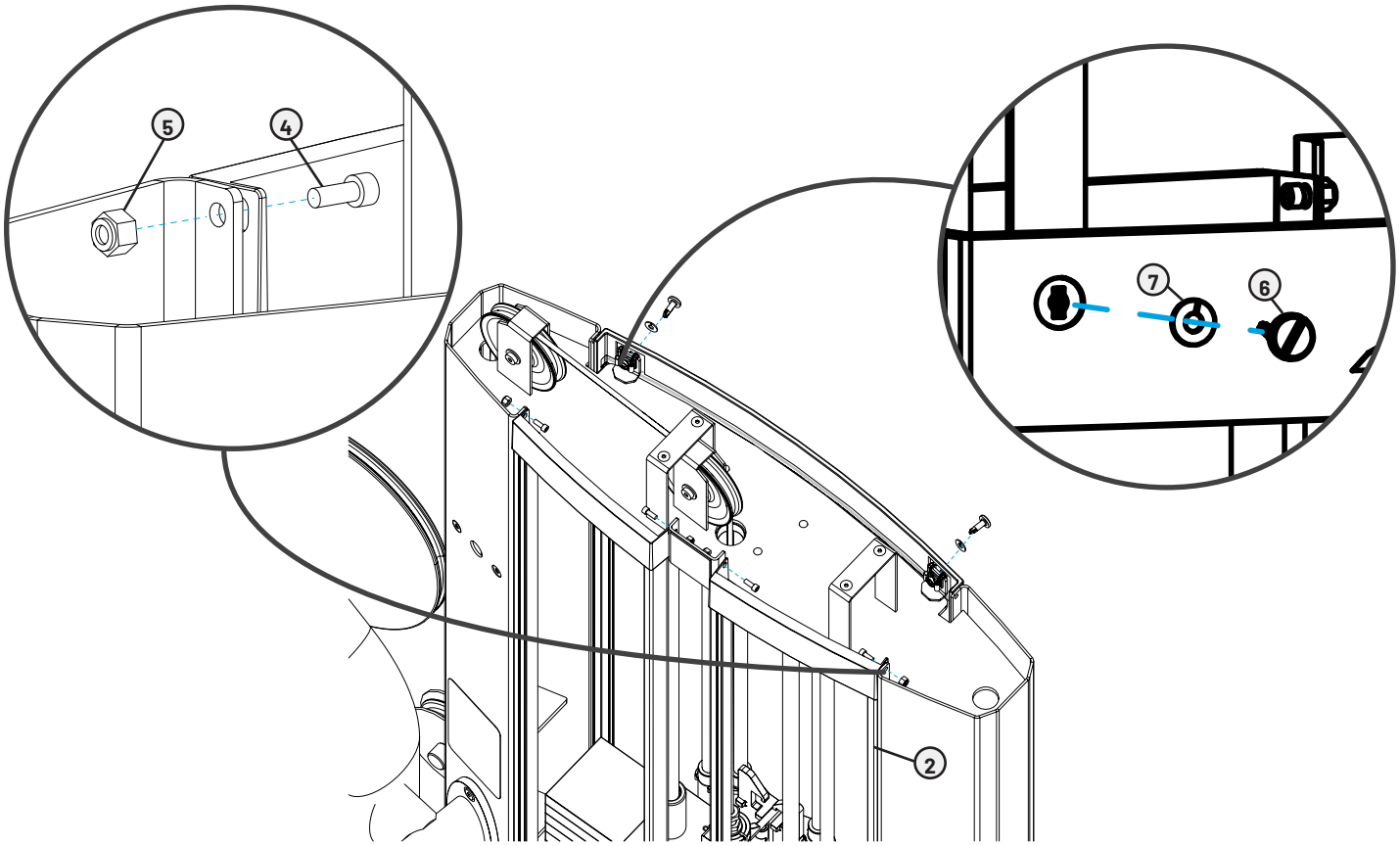

STEP 4—ATTACH METAL SHROUDS TO UPRIGHT ASSEMBLY

A. Using an allen wrench, socket wrench or open end wrench, and a flat head screwdriver, remove and set aside the shroud fasteners from the upright assembly using 4 hex screws, 4 lock nuts, 2 twist lock screws, and 2 lock washers.

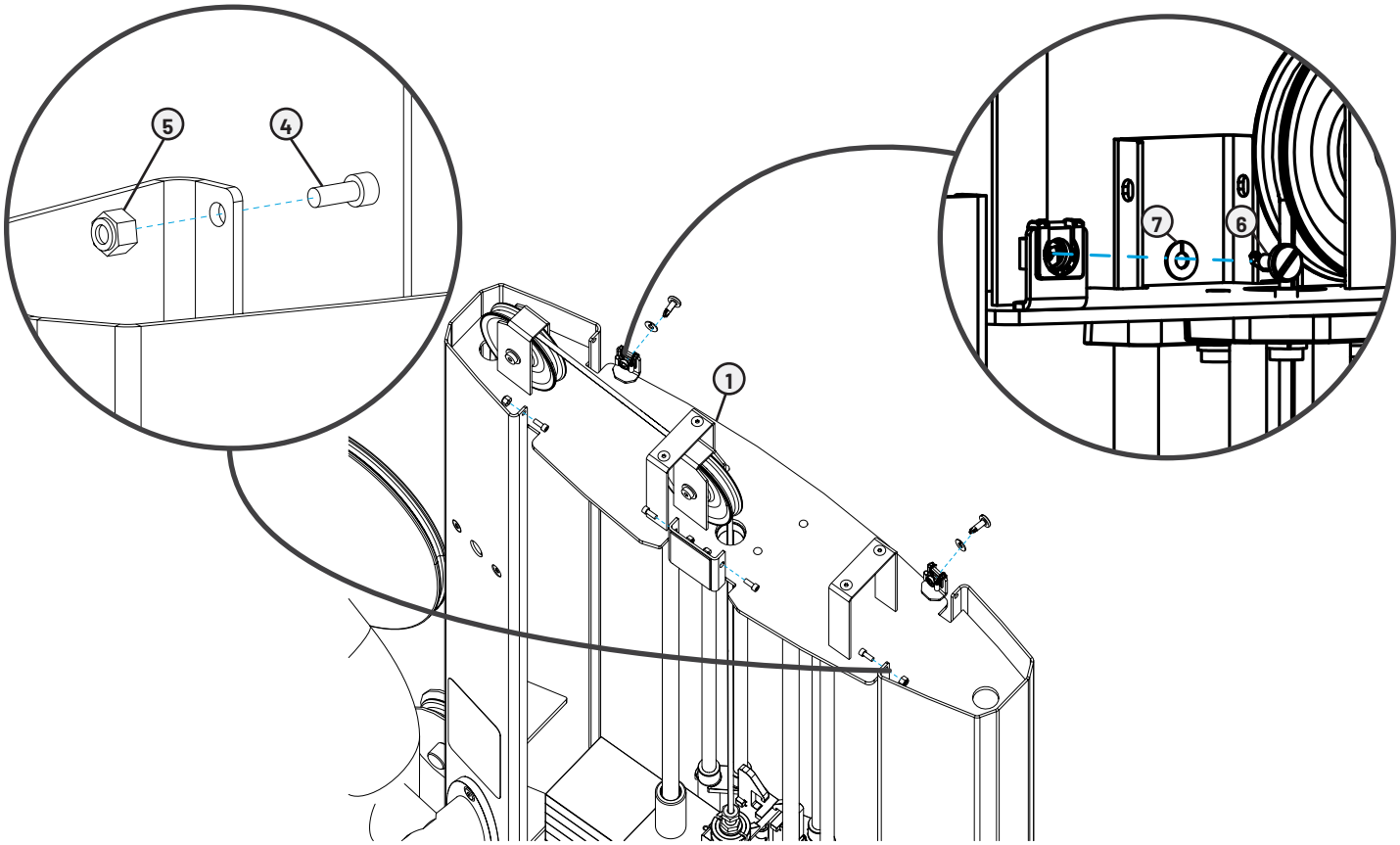

STEP 4—ATTACH METAL SHROUDS TO UPRIGHT ASSEMBLY CONTINUED

B. Slide the front metal shrouds onto the upright assembly.

C. Using an allen wrench and a socket wrench or open end wrench, secure the front shrouds to the upright assembly using the 4 hex screws and 4 lock nuts.

D. Slide the rear shroud onto the upright assembly.

E. Using a flat head screwdriver, secure the rear shroud to the upright assembly using the 2 twist lock screws and 2 lock washers.

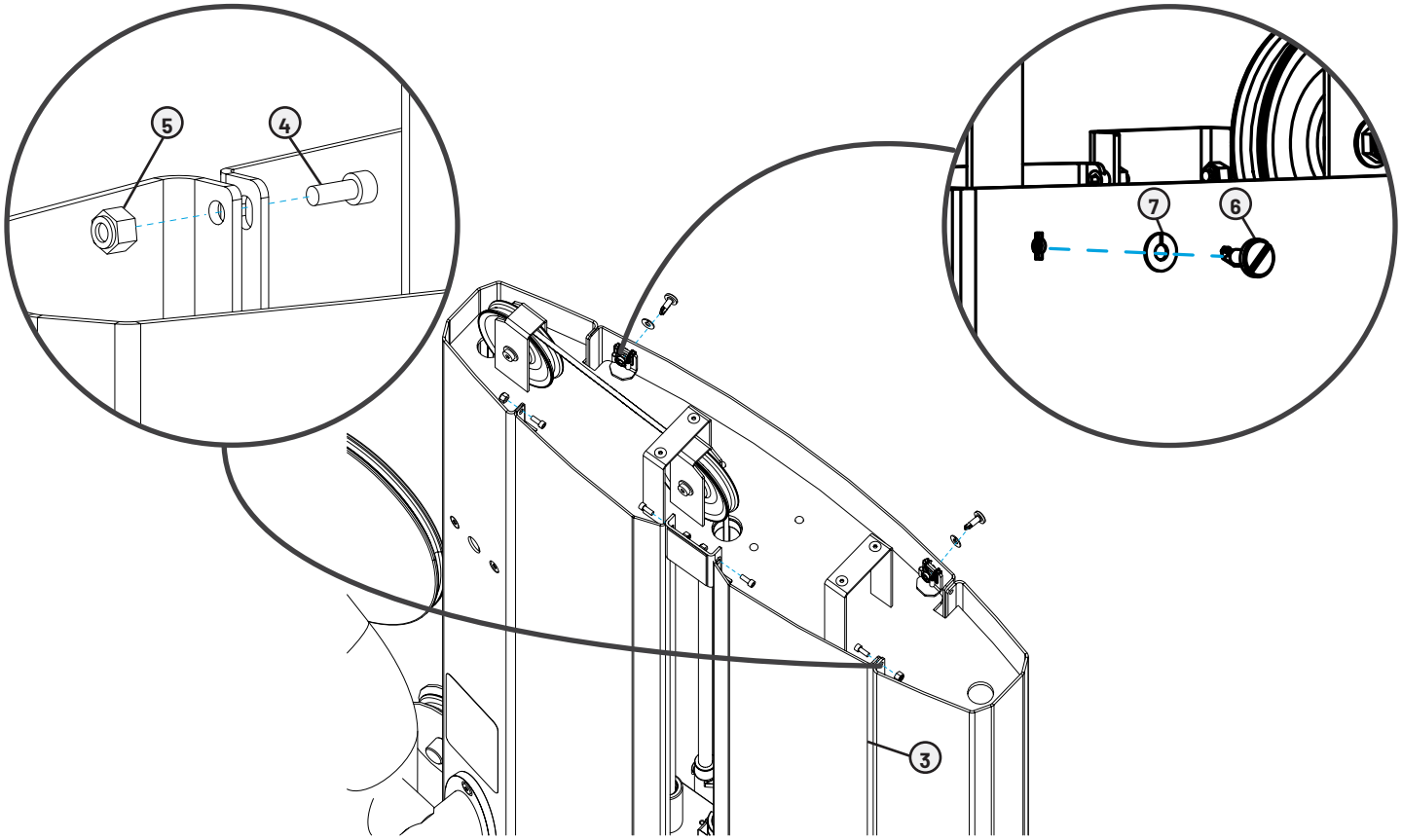

STEP 5—ATTACH TOP COVER TO UPRIGHT ASSEMBLY

NOTE: Supplemental top cover video available on vimeo.com: https://vimeo.com/723539522?share=copy.

TOOLS NEEDED	
Allen Wrenches 3/32" and 5/32"	

ITEM	PART	DESCRIPTION	QTY
1	SPL-01-UPR300X	UPRIGHT ASSEMBLY	1
2	SPL-00-CVR021	CAP, UPRIGHT	1
3	SPL-00-CVR022	TRAY, UPRIGHT COVER	1
4	SPL-00-CVR023	MAT, UPRIGHT TRAY	1
5	C1239	FHCS, 8-32 X 1/2"	4
6	C1240	FHCS, 1/4"-20 X 1/2"	4

A. Using a 5/32" allen wrench, remove and set aside the 4 top cover hex screws from the upright assembly.

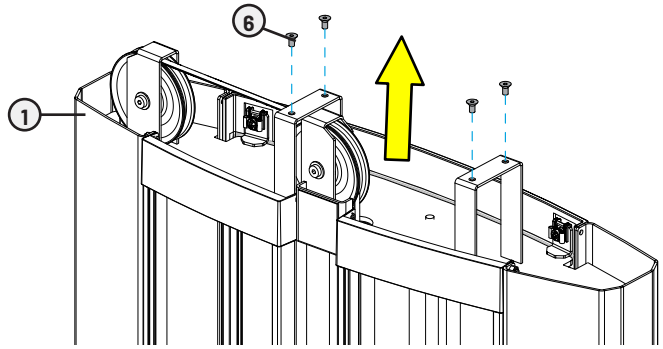

B. Place the top cover onto the upright assembly. Remove and set aside the tray mat.

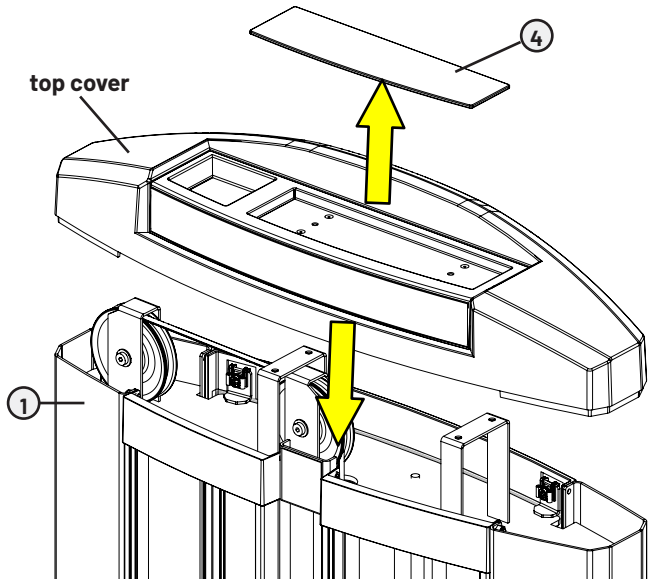

C. Using a 3/32" allen wrench, remove and set aside the 4 tray cover hex screws. Remove and set aside the tray cover.

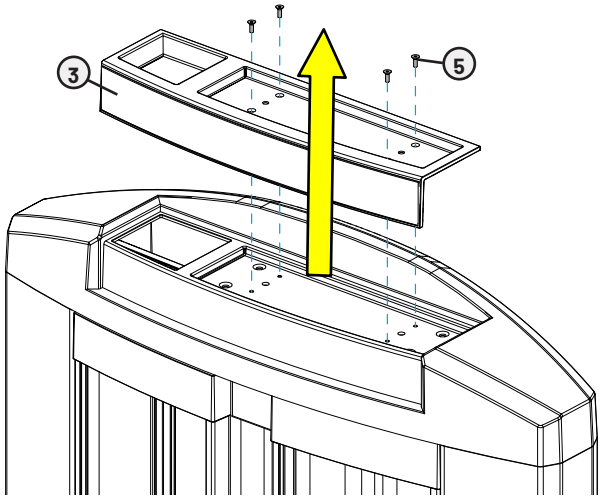

D. Attach the top cover to the upright assembly using the 4 previously set aside top cover hex screws.

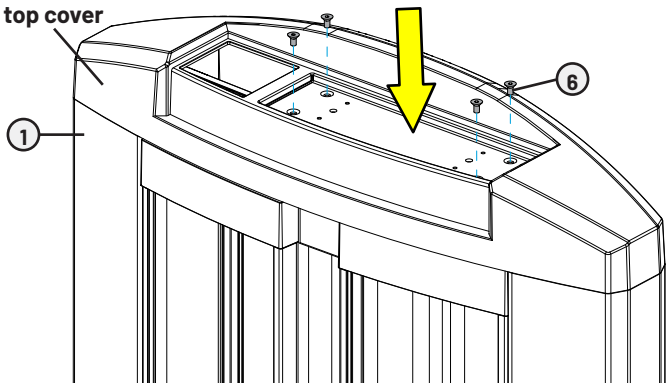

STEP 5—ATTACH TOP COVER TO UPRIGHT ASSEMBLY CONTINUED

E. Reattach the tray cover onto the top cover using the 4 previously set aside the tray cover hex screws.

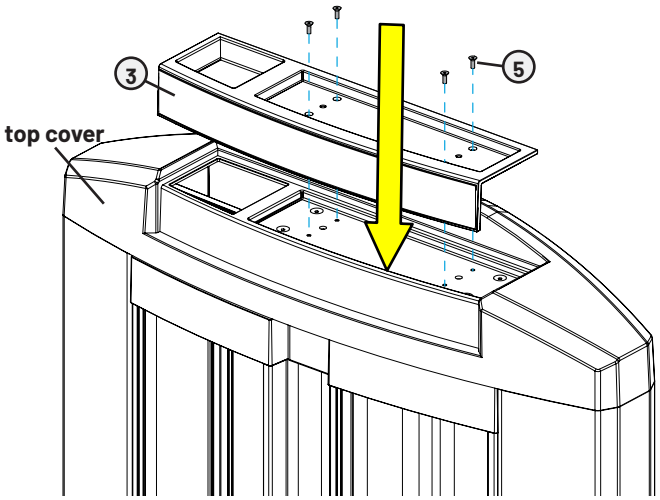

F. Fully press the tray mat onto the tray cover.

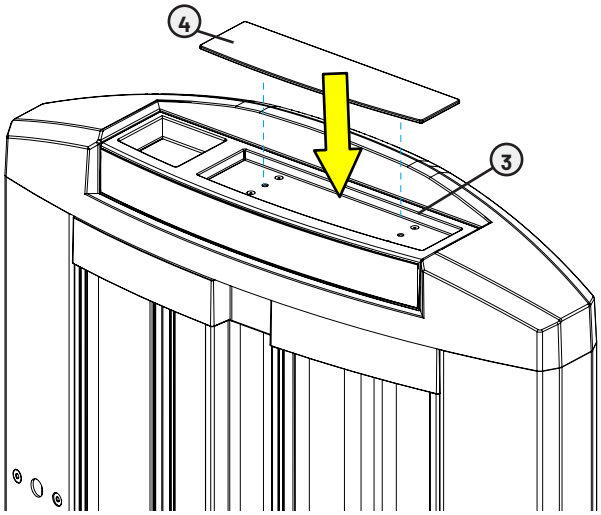

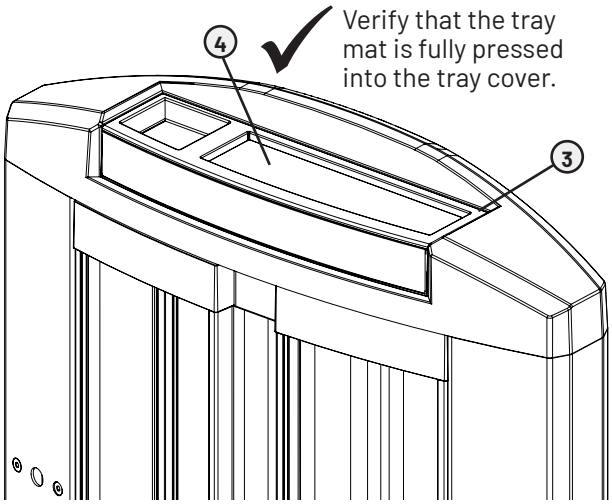

STEP 6—ATTACH PHONE HOLDER TO UPRIGHT ASSEMBLY

TOOL NEEDED	
#2 Phillips Screwdriver	

ITEM	PART	DESCRIPTION	QTY
1	SPL-01-UPR300X	UPRIGHT ASSEMBLY	1
2	SPL-00-RCK001	HOLDER, PHONE	1
3	C1226	PHCS, #10-32 X 1", BLK	2

Using a #2 Phillips screwdriver, attach the phone holder to the upright assembly using 2 screws.

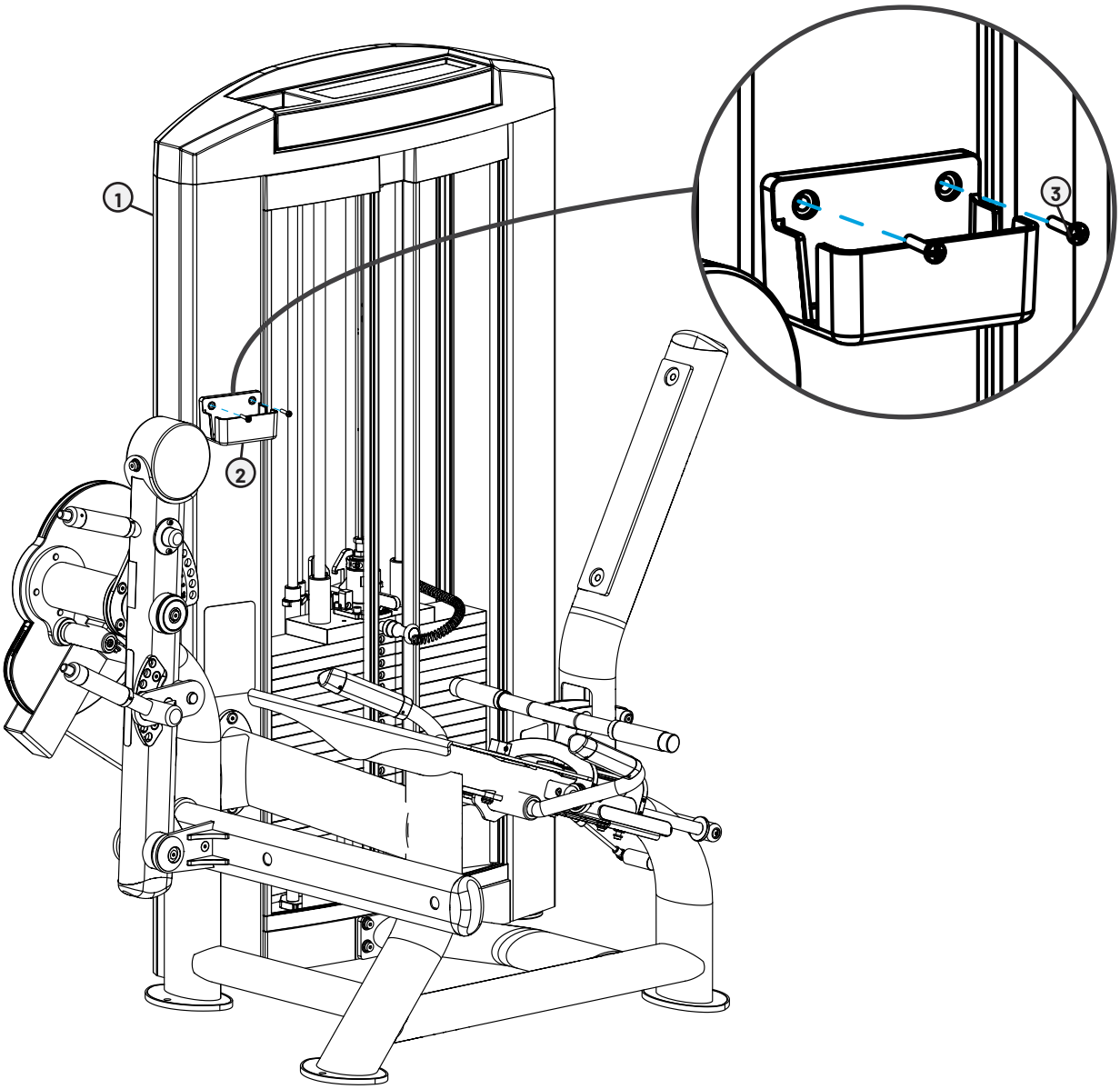

STEP 7—ATTACH PADS TO MAIN FRAME ASSEMBLY

TOOL NEEDED	
Allen Wrench	

ITEM	PART	DESCRIPTION	QTY
1	SPL-01-MFR350X	MAIN FRAME ASSEMBLY	1
2	SPL01PDKT	KIT, SPL0100 PAD	1
3	C 631A	SHCS, 3/8"-16 X 3" BLK	2
4	C 749B	LOCK WASHER, 3/8", BLK ZP	10
5	C1257	LPSHCS, 3/8"-16 X 1-1/4" E-COAT	6
6	C 754B	WASHER, FLAT, 3/8" SAE, BLK	6
7	C 629A	SHCS, 3/8"-16 X 2-1/2", BLK	2
8	SPL-02-PAR110	SLEEVE, PAD BOLT	2

A. Using an allen wrench, attach the back pad to the main frame assembly using 2 hex screws and 2 lock washers.

⚠**CAUTION:** Avoid damage to the pads. Verify the back pad assembly includes both the pad and plastic tray.

B. Using an allen wrench, attach the seat pad to the main frame assembly using 6 hex screws, 6 flat washers, and 6 lock washers.

C. Using an allen wrench, attach the leg pad to the main frame assembly using 2 hex screws, 2 lock washers, and 2 bolt sleeves.

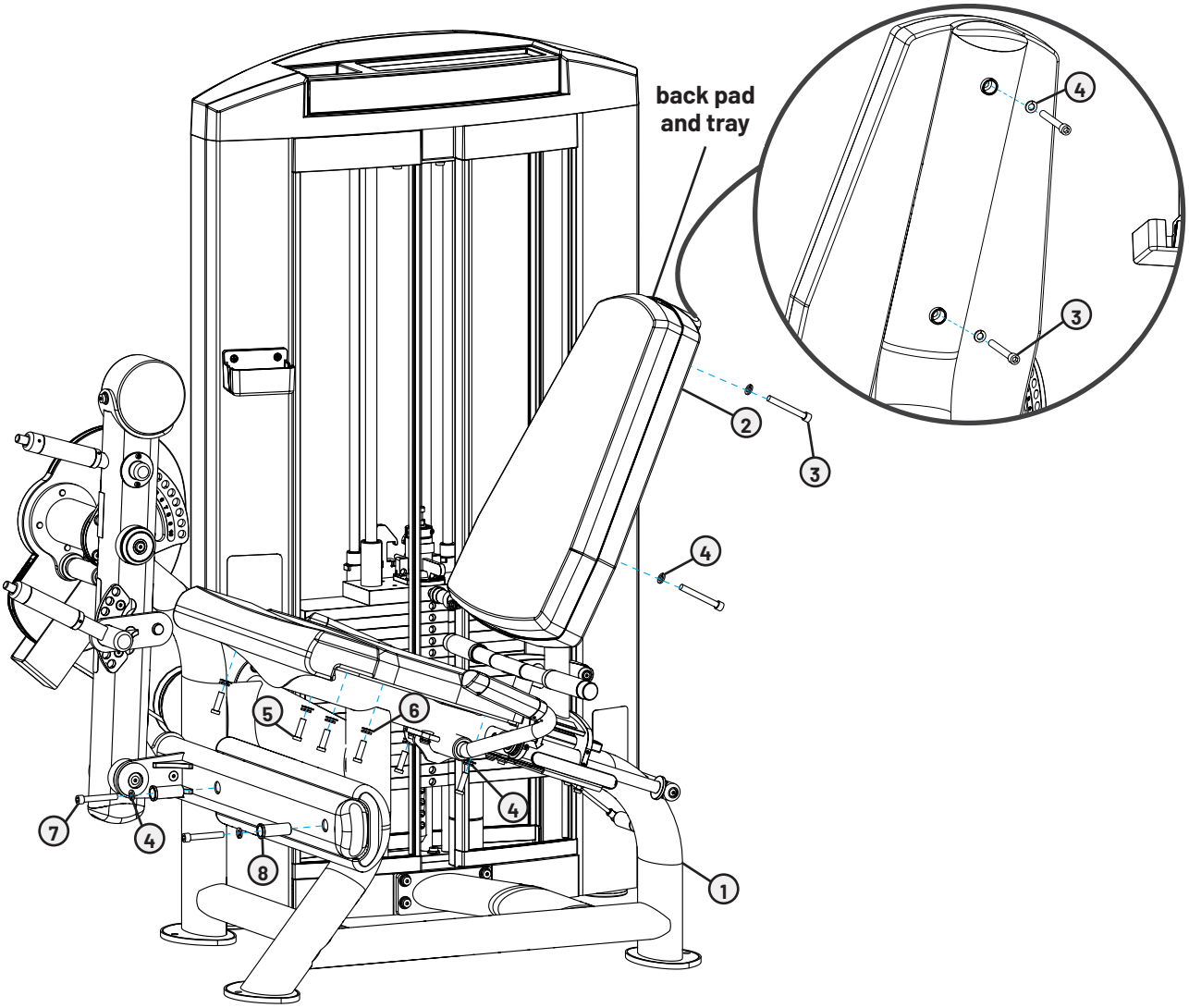

PREVENTATIVE MAINTENANCE

Preventative maintenance is crucial to maintaining the function and safety of this equipment. Your facility must establish written guidelines for preventative maintenance and keep written or online records of the maintenance performed on these products. As a minimum, the items presented in the Safety Instructions section of this document and the items that follow here, should be included in your maintenance program.

IMPORTANT! Always purchase replacement parts from TRUE. Many parts are tested and manufactured specifically for TRUE equipment. Use of unapproved parts may cause serious injury and/or void the limited warranty.

DAILY INSPECTION AND MAINTENANCE

The following items are critical to the safety of users and maintenance staff as well as ensuring the optimum performance of the machines. These inspections should be performed each day before the equipment is subject to use. TRUE is not responsible for performing or scheduling regular maintenance or inspections.

- Inspect for cleanliness. Wipe and dry the upholstery, frame, and chrome. (See cleaning the equipment.)
- Inspect all adjustment pins, weight stack pins, set screws, gas shocks, snap links, and pulleys if equipped.
- Inspect all safety and instructional decals.
- Inspect all weight stack shields if equipped.
- Verify that rubber hand grips are intact and secure.
- Verify that anti-skid foot grips are intact and secure.

WEEKLY INSPECTION AND MAINTENANCE

The following items are critical to the safety of users and maintenance staff as well as ensuring the optimum performance of the machines. These inspections should be performed each week. TRUE is not responsible for performing or scheduling regular maintenance or inspections.

- Verify that the adjustment pop pins retract easily and fully engage (when released) into each adjustment disc hole/slot. The pop pins are spring loaded so they should return to the engaged position when you release the knob.
- Verify that the adjustment pin disengages and engages freely when actuating the adjustment mechanism. Be sure that the adjustment pin inserts fully into the adjustment disc.
- Verify that all hardware is tight and that associated frame members are secure. Apply a few small drops of a thread locking compound such as Loctite® on any loose bolts.
- Inspect frame for integrity and function. Replace any components at the first sign of wear with only TRUE supplied parts.

OTHER SCHEDULED PREVENTATIVE MAINTENANCE

TRUE recommends that scheduled maintenance be performed by a qualified service technician. Please contact your dealer or visit www.truefitness.com to contact a local TRUE authorized service technician.

Monthly

Clean guide rods and lubricate with a Teflon grease if equipped with guide rods.

Every 6 Months

Lubricate pivot bearing and linear bearings with lithium grease.

CLEANING THE EQUIPMENT

Daily Cleaning

Wipe all machines with a water dampened cloth and dry completely. This includes painted parts, chrome plated parts (except guide rods), plastic parts, and upholstered pads. It is important not to leave parts damp. This will increase the potential for corrosion to occur.

⚠CAUTION: Certain anti-bacterial cleaners and other harsh cleaning agents can induce corrosion on the machine components. These solutions can also dry out and cause cracking and splitting on the upholstery.

Heavy Duty Cleaning

- Guide Rods (if equipped)—Clean and lubricate with a Teflon Spray. Be sure to coat the entire guide rod. Spraying lubricant into the cap plate bushings is also recommended.
- Chromed Adjustment Tubes—Wipe away dust and dirt before applying a Teflon spray lubricant. TRUE recommends using Tri-Flow™ or a similar brand.
- Linear Bearings—Clean the linear shaft and lubricate (as required) with Teflon based grease. Keeping linear bearings clean and lubricated is critical to long life and good performance.
- Painted Frames—If you have scuff marks, grease or a heavy dirt buildup on frame components, start with a mild soap solution or a diluted solution of a product such as Simple Green with a dilution of 32:1. If you cannot remove the marks using those methods, use a car polish/cleaner. **DO NOT** use solvents such as lacquer thinner, mineral spirits or acetone. For deeper scuff marks, use an automobile finish rubbing compound.
- Upholstery—For heavy duty cleaning, use a mild soap solution. This method should be sufficient in the majority of instances. In severe stain cases, you can use a solution of 5-10% household bleach diluted with water. Be sure to test an inconspicuous area first. **DO NOT** use chemical cleaners on the vinyl upholstery. You can also use a lanolin based hand cleaner to clean your upholstery. Wipe off after cleaning with a damp cloth and thoroughly dry.
- Plastic Parts—Use a mild soap solution to clean dirt and grease marks.
- Labels—Use a mild soap solution to clean dirt and grease marks.
- Shrouds—Use a mild soap solution to clean dirt and grease marks.

⚠CAUTION: Do not use any acidic cleaners. Doing so will weaken the paint or powder coatings and may void the TRUE Warranty. Never pour or spray liquids on any part of the equipment. Allow the equipment to dry completely before using.

⚠CAUTION: If you determine that the equipment needs service, make sure that the equipment cannot be used inadvertently and ensure other users know that the machine needs service.

To order parts or to contact a TRUE authorized service representative, please visit www.truefitness.com.

CABLE INSPECTION AND MAINTENANCE

One of the most critical areas that require frequent inspection on any weight machine is the cable or belt system that lifts the weight stack if the machine is equipped with those items. Sudden failure of a worn cable can, in some instances, result in injury to the user. It is the responsibility of the facility to inspect the cables frequently. Cables are components that wear over time. This means that the more often a piece of equipment is used, the greater the likelihood that cable wear will occur. This holds true for equipment made by any manufacturer and applies to urethane belts as well as wire rope cables. Listed below are the areas of the cable that require inspection.

IMPORTANT! TRUE recommends that all cables be replaced on an annual basis to maintain the safety of all users.

CABLE WEAR

Inspect all cables for any signs of wear. Pay close attention to the cable in the area of the end fittings and attachment points. Inspect the areas around the pulleys and/or cams. Shown below are examples of cables that exhibit signs of potential failure. If any of these conditions are apparent, the machine should immediately be taken out of service and repaired. Be sure to use only cables supplied by TRUE. **DO NOT** use cables that have fittings attached with hand-crimp tools.

Examples of Cable Wear	
Twisted Cable (Zig-Zag Pattern)	**Break in the Cable Cover** 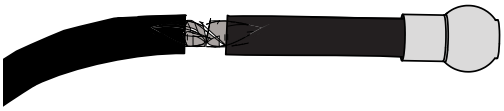
Break or Bend in the Cable	**Tear in the Cable Cover**
Stretched Cable Covering	**Crimp Connector Dislodged** 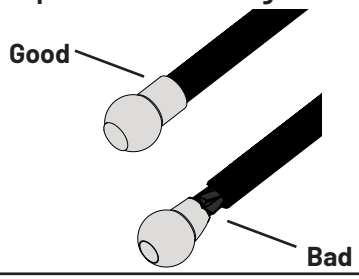

CABLE TENSION (IF APPLICABLE)

Ensure that the cables are adjusted to remove any slack using the threaded end fittings. These are normally located at the weight stack connection. Depending upon the machine, there may be multiple threaded fitting on multiple cables. You can determine if there is too much slack by performing the exercise. As you start to move a load arm or handle, the weight stack should lift immediately. If not, the cable tension needs to be adjusted.

To adjust the cable tension, loosen the cable nut that is located on the cable bolt connected to the top plate. Tighten the cable bolt until the top plate is barely lifted off of the first weight plate and then re-tighten the cable nut.

⚠**CAUTION:** A minimum of ½" (12.7mm) of the threaded portion of the cable bolt must be threaded into the top plate. Maximum height from bottom of nut to bolt head is 1¼" (31.75mm). Make sure locking nut is tight.

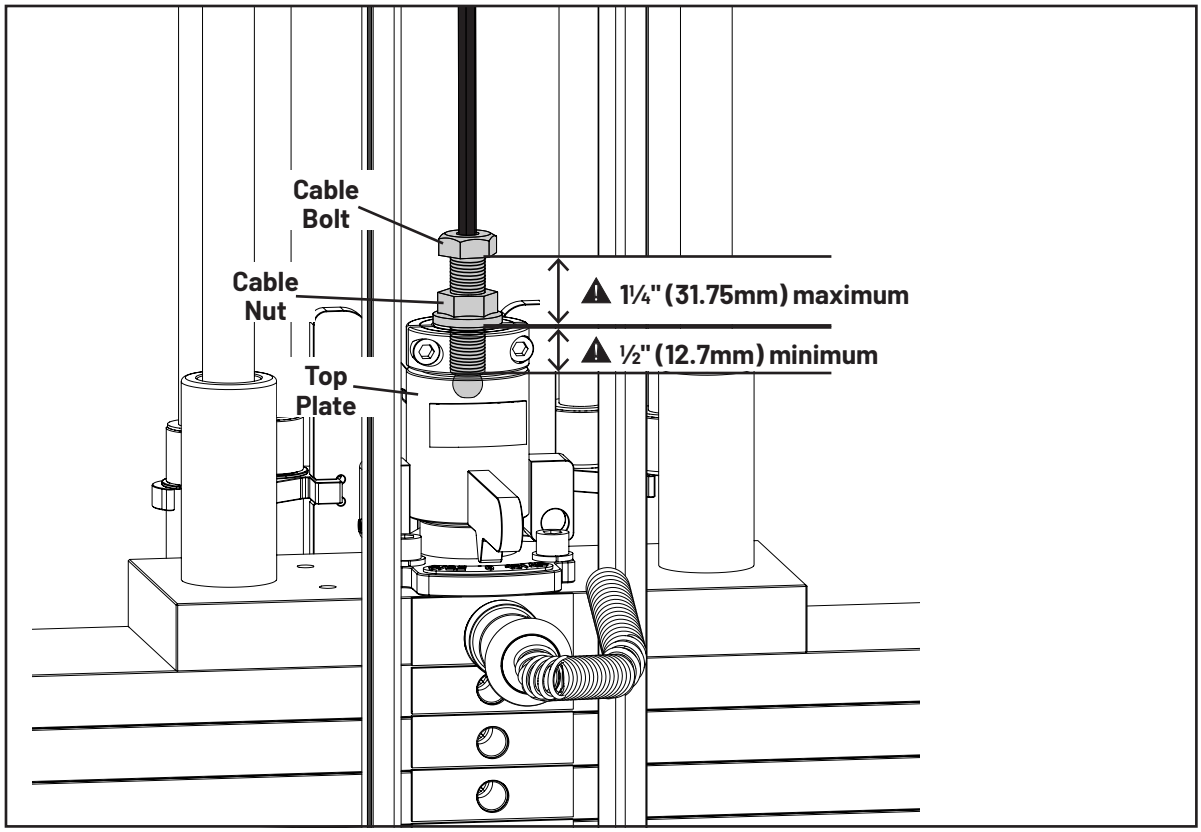

HANDLE FITTINGS (IF APPLICABLE)

Inspect the cable and fittings where handles are attached to the end of the cable. The fittings originally supplied with your machine are load rated snap-links and quick-links. Be sure the hex nut on the quick link is fully tightened. Be sure that the snap-link opens and closes easily and is fully engaged when closed. Replace if either are damaged.

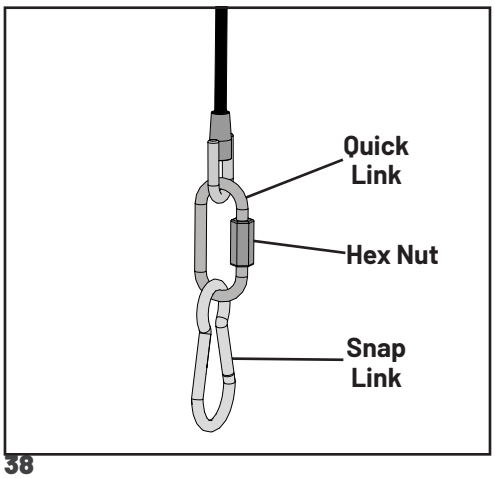

CABLE FITTING ATTACHMENTS (IF APPLICABLE)

Depending upon the machine, cable end fittings can either be securely fixed, rotate about a single axis, or can be free floating. On machines where the cable fitting is designed to rotate about a single axis, verify that the fitting rotates freely and that the hardware used to secure the cable pivot axle (most likely a pin or a bolt) is correctly fastened.

⚠**CAUTION:** When tightening hardware for cable fittings that are designed to rotate, make sure not to overtighten as to cause the cable fitting to bind. An occasional application of synthetic grease can be applied to the cable fitting pivot axle.

Examples of Cable Fitting Attachments

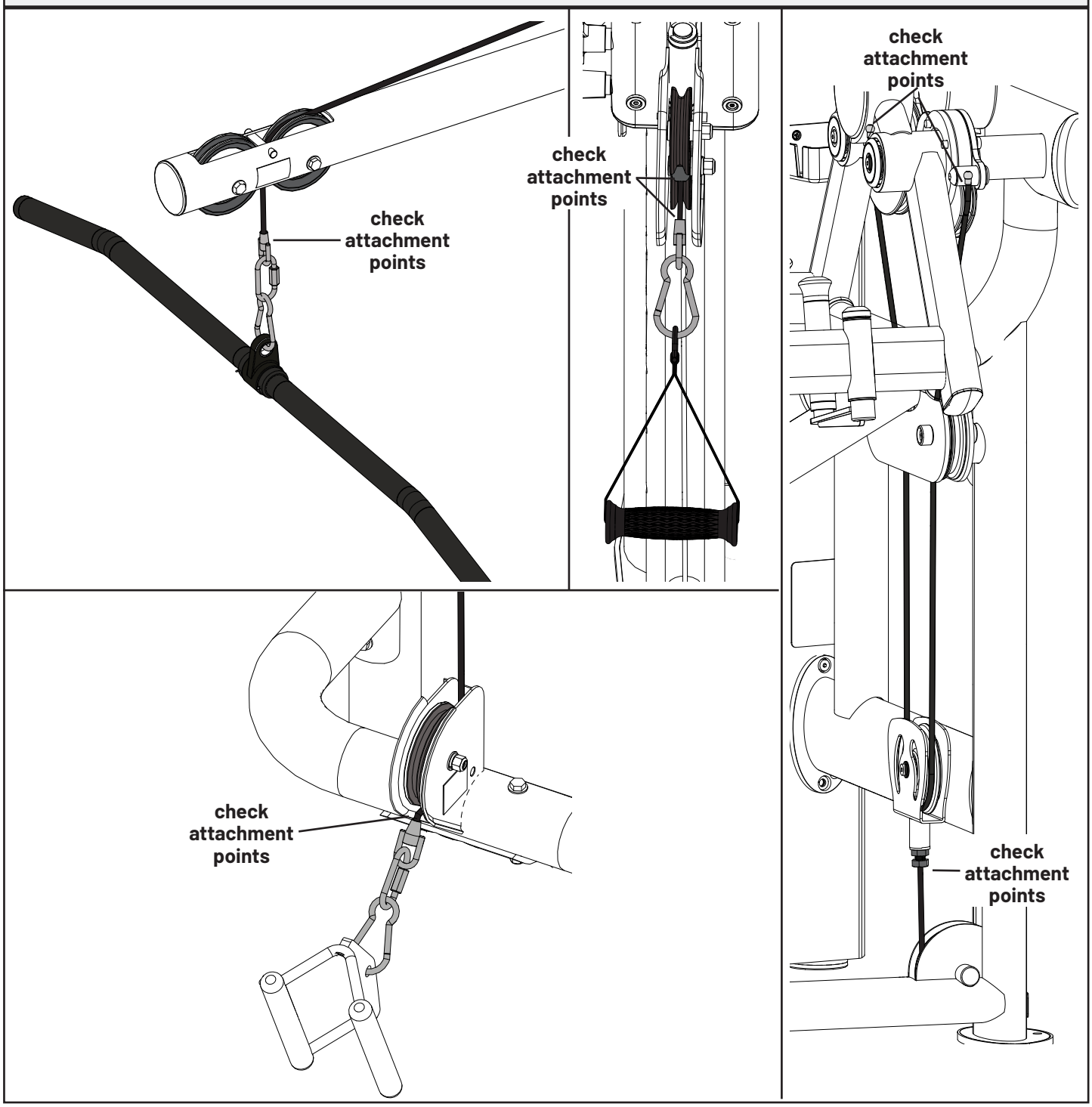

WEIGHT STACK SELECTOR PIN INSPECTION

Verify that the weight stack selector pin is attached with the coiled lanyard to the top plate (if equipped). Verify the selector pin slides in and out of each weight plate. Place the selector pin in the top plate. Cycle the machine through the intended motion. Verify that the machine operates smoothly without binding.

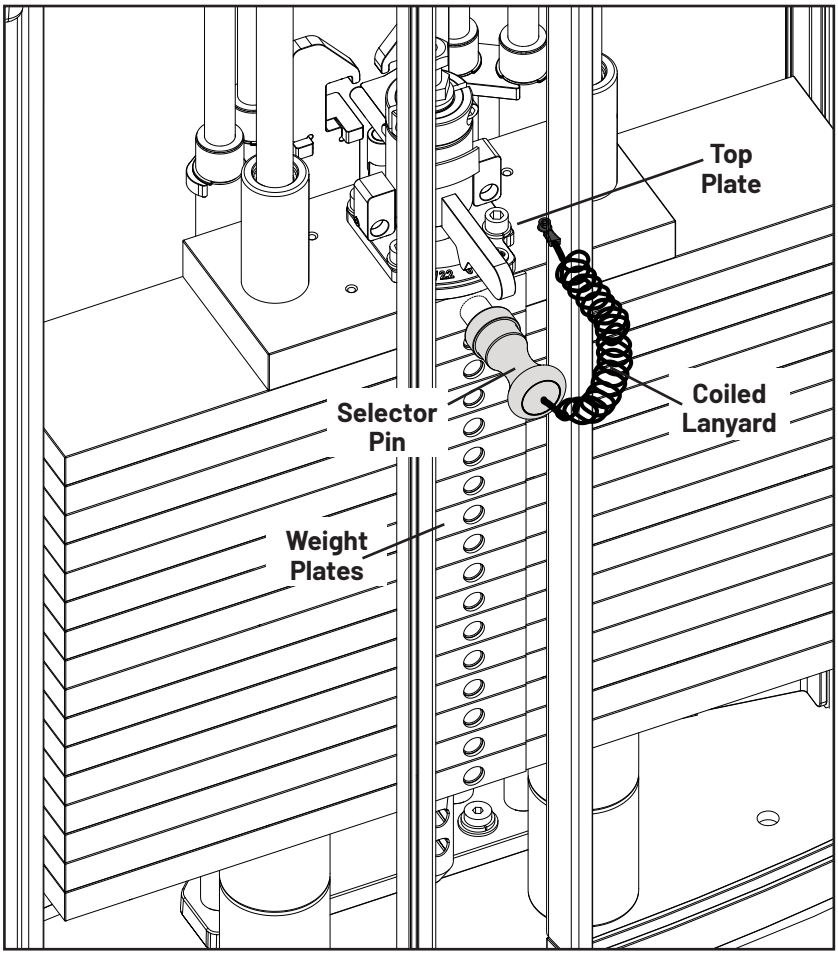

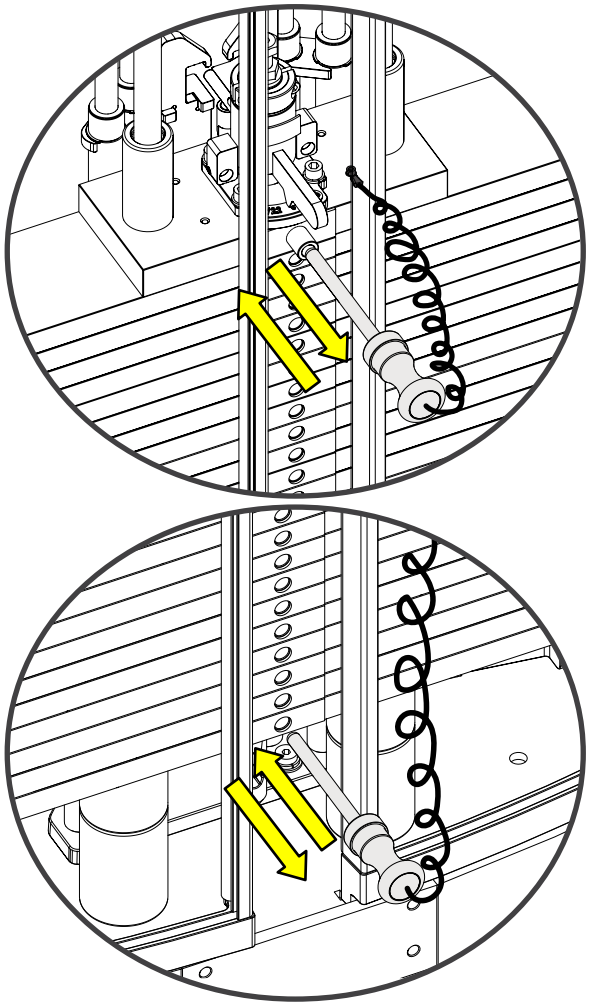

WARRANTY INFORMATION

ATTENTION OWNER'S: **To ensure you get the most out of your purchase and receive the full benefits of our warranty, you must register your product within 45 days of purchaser's receipt of this product.**

COMMERCIAL WARRANTY

CARDIO				
WARRANTY ITEM	**VAPOR, APEX**	**GRAVITY PLUS**	**GRAVITY**	**ADX, RO, SURGE**
Frame*	10 Years (with registration)	10 Years (with registration)	10 Years (with registration)	5 Years (with registration)
Parts	3 Years	3 Years	3 Years	3 Years
Consoles	3 Years	3 Years	3 Years	2 Years
Labor**	2 Years (with registration)	2 Years (with registration)	1 Year (with registration)	1 Year (with registration)
Wear Items***	180 Days	180 Days	180 Days	90 Days

STRENGTH	
WARRANTY ITEM	**PALLADIUM, FUSE XL, FORCE, FITNESS LINE, ATLAS, XFT, XFW, MP, SM, FT, FS**
Frame*	10 Years (with registration)
Parts	5 Years
Cables and Linear Bearings	1 Year
Labor**	1 Year (with registration)
Wear Items***	90 Days (6 Months for FORCE only)

FLEXIBILITY	
WARRANTY ITEM	**STRETCH**
Parts	1 Year
Wear Items***	90 Days

Warranty does not cover damage or equipment failure resulting from or caused by improper assembly/installation, accident, misuse, abuse, unauthorized modification, or failure to provide reasonable and necessary maintenance.

*Frame is the serialized base of the unit and does not include paint or coatings. Frame warranty will equal that of parts warranty unless, within 45 days of purchaser's receipt of this Product (A) the warranty is registered on-line or (B) if the form provided with equipment is filled in, signed by the original purchaser, and mailed to TRUE.

**Labor warranty is available for equipment located within United States. TRUE Fitness equipment is automatically covered under a 6-month Limited Labor Warranty. This 6-month Limited Labor Warranty begins from the date of purchase shown by a valid receipt. If a valid receipt is not available, the 6-month Limited Labor Warranty period begins from the date of manufacture on the originally purchased equipment.

***Wear Items include: batteries, covers, caps, badges, paint, pedal straps, toe clips, elliptical pedal inserts, foot pads, Coax/TV, HDMI, USB, mirroring or Ethernet connections, and safety key.

See Warranty Details for product registration requirements, terms, conditions, and complete coverage details.

ATTENTION OWNER'S: **To ensure you get the most out of your purchase and receive the full benefits of our warranty, you must register your product within 45 days of purchaser's receipt of this product.**

WARRANTY DETAILS

All TRUE Fitness products are distributed by TRUE and are warranted to the original product purchaser and the parts of the TRUE product (the "Product") listed below. During the applicable Warranty Period, the Product, under normal use and service, shall be free of manufacturing defects in workmanship and materials.

NOTE:

- Standard shipping is included with warranty part replacement.
- Shipping for warranty frame or replacement is included for the period of three years from the original date of purchase.

All Warranty Items are "LIMITED"

- This limited warranty does not cover damage or equipment failure resulting from or caused by improper assembly/installation, failure to follow instructions and warnings in owner's manual, accident, misuse, abuse, unauthorized modification, failure to provide reasonable and necessary maintenance, software version upgrades, compatibility with third party/aftermarket hardware, software, applications, or websites.
- TRUE's liability shall under no circumstances exceed the actual amount paid by you for the product, nor shall TRUE under any circumstances be liable for any consequential, incidental, special or punitive damages or losses, whether direct or indirect.
- Some states or countries do not allow the exclusion or limitation of incidental or consequential damages, so the above limitation or exclusion may not apply to you.
- TRUE will neither assume nor authorize any person to assure for us any other obligation or liability concerning the sale of this Product. Under no circumstances shall TRUE be liable under this warranty, or otherwise, of any damage to any person or property, including any lost profits or lost savings, for any special, indirect, secondary, incidental, or consequential damages arising out of the use of or inability to use this Product.
- This limited warranty, which is given expressly and in lieu of all other express warranties, constitutes the only warranty made by TRUE.
- The remedies described herein are your sole and exclusive remedies and TRUE's entire liability for any breach of this limited warranty.
- No one is authorized to change, modify, or extend the terms of this limited warranty.
- This limited warranty is in lieu of all other warranties of any kind either expressed or including but not limited to implied warranties of merchant.
- This limited warranty applies to the product only while the product remains in the possession of the original purchaser and is not transferable.
- This limited warranty becomes VALID ONLY if the Product is initially assembled/installed by a TRUE authorized dealer/technician (if anyone other than a TRUE authorized dealer/technician initially assembles and installs the Product, this limited warranty will be void unless the written authorization of TRUE is first obtained).
- The "Warranty Period" for this limited warranty shall be for the duration forth in the applicable charts, beginning from the date of original purchase; provided, however, except to the extent prohibited by applicable law, the "Warranty Period" shall only be six months for labor (from the date of original purchase) unless, within 45 days of purchaser's receipt of this Product (A) the warranty is registered on-line or (B) if the form provided with equipment is filled in, signed by the original purchaser, and mailed to TRUE.
- All serial numbers must be intact on the Product for this limited warranty to be valid.
- Installation or download of any 3rd party or after-market products will result in voided warranty. This includes, but is not limited to, electrical and mechanical parts, software, or applications.
- TRUE will ship to an authorized service provider any new or rebuilt replacement part or component, or at our option, replace or refund the Product.
- Replacement parts are warranted for the remaining portion of the original warranty period.
- Proof/receipts of necessary maintenance may be required within 30 days of requested warranty part or service.
- This limited warranty does not apply to the performance of the heart rate accuracy will not be warranted as performance varies, based on user's physiology, age, method of use, and other external factors.

ATTENTION OWNER'S: **To ensure you get the most out of your purchase and receive the full benefits of our warranty, you must register your product within 45 days of purchaser's receipt of this product.**

WARRANTY REGISTRATION

Thank you for purchasing a TRUE product!

To ensure you get the most out of your purchase and receive the full benefits of our warranty, **you must register your product within 45 days of purchaser's receipt of this product**.

How to register your product:

- **Online:**
  Simply visit our website at truefitness.com and register your product warranty in one simple step.
- **QR Code:**
  Scan the QR code below with your smartphone to be taken directly to the registration page.
- **By Mail:**
  Complete the information below and mail to:
  TRUE Product Support
  1 GLAZER WAY
  ST. CHARLES, MO 63301

PLEASE RETAIN THIS PORTION FOR YOUR RECORDS
BASE SERIAL NUMBER:

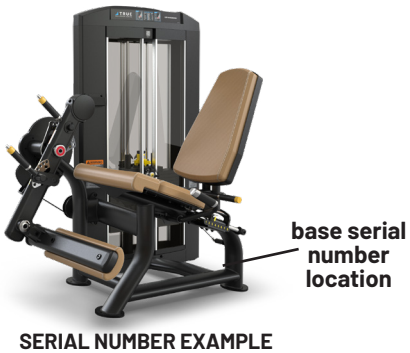

SERIAL NUMBER EXAMPLE

TRUE
TRUE FITNESS TECHNOLOGY, INC
MODEL NO: SPL0100
SERIAL NO: 25-SPL0100000

Warranty Registration

Base Serial Number

Purchase Date

Company (if applicable)

Customer Name (First and Last)

Email Address

Phone Number

Street Address

City

State

Postal Code

Country

TRUE FITNESS

CONTACT US
service@truefitness.com
1.800.883.8783

Office: 1 Glazer Way, St. Charles, MO 63301
Shipping: 3831 Mueller Rd, St. Charles, MO 63301

TRUEFITNESS.COM

MAN-SPL0100 Owner's Manual, Assembly Guide, and Warranty Card
REV09
© 2026 TRUE Fitness All Rights Reserved.