PLS0900
TRICEPS EXTENSION

TRUE FITNESS

SCAN FOR UP-TO-DATE OWNER'S MANUAL

SCAN FOR ASSEMBLY VIDEO

MODEL PLS0900
(MAN-PLS0900 REV07)

OWNER'S MANUAL

IMPORTANT—PLEASE READ

All products shown are prototype. Actual product delivered may vary. Product specifications, features, and software are subject to change without notice.

For the most up-to-date version of this manual, please see our website:
https://truefitness.com/services-support/user-manuals/

CONTACTING OUR SUPPORT TEAM

To contact TRUE for any of your pre or post installation questions, please call our toll-free numbers Monday - Friday during normal business hours:

- Commercial Direct Customers and Corporate Accounts | 800.868.8783
- Retail Customers and Distributors | 800.883.8783

Or email us:

- Commercial Direct Customers and Corporate Accounts | service.direct@truefitness.com
- Retail Customers and Distributors | service@truefitness.com
- Service International | int.service@truefitness.com

When contacting TRUE, please have the following information ready:

- Serial Number of Unit
- Contact Information—Full Name, Email, and Phone Number
- Address of Facility or Residence
- Detailed Description Regarding Symptom of the Unit (along with pictures or video if applicable)

NOTE: Authorized service providers, dealers, and distributors may also use TRUE's online resource | portal.truefitness.com.

CONTACTING OUR SALES TEAM

Interested in owning more TRUE products? Please contact us with any product inquires so that we may direct you to the appropriate sales representative to help answer your questions.

- Phone | 800.426.6570
- Email | sales@truefitness.com

REPORTING FREIGHT CLAIMS OR PARTS DAMAGE

Unfortunately, sometimes materials can be damaged during shipment. If materials are damaged during shipment, please follow the guidelines below to determine the appropriate process for you to follow.

Severe Damage—Obvious damage to external packaging and internal product.

Please refuse the shipment and it will be returned to TRUE by the carrier. Contact TRUE product support by calling 800.883.8783 or sales support by calling 800.426.6570 Monday-Friday during normal business hours to notify us that the shipment has been refused. Once we have received the damaged shipment, a replacement shipment will be sent to you. If the shipment comes in multiple boxes, only refuse boxes with damage.

Slight Damage—Minimal damage to external packaging with unknown internal damage to product.

If the shipment has minimal damages and you are not sure if the actual product is damaged, you must sign the bill of lading as damaged when accepting the shipment. Once you have opened the box and you have determined something is indeed damaged, please gather the serial number, model number, description of damage, and photos of damage. Please make sure the photos include the damaged product as well as the damaged box the product arrived in. Contact TRUE product support (service@truefitness.com | 800.883.8783) or TRUE sales support (sales@truefitness.com | 800.426.6570) Monday-Friday during normal business hours.

Concealed Damage—No damage to external packaging but internal damage to product.

You may receive a shipment that looks intact and discover once the box has been opened that there are hidden damages. Please notify the carrier immediately. TRUE will not be able to file a claim if the carrier is not notified in a timely manner. Once you have called the carrier you will need to gather the serial number, model number, description of damage, and photos of damage. Contact TRUE product support (service@truefitness.com | 800.883.8783) or TRUE sales support (sales@truefitness.com | 800.426.6570) Monday-Friday during normal business hours.

TABLE OF CONTENTS

SAFETY INSTRUCTIONS

IMPORTANT SAFETY INSTRUCTIONS—SAVE THESE INSTRUCTIONS....5
GENERAL CARE AND MAINTENANCE....7
COMMERCIAL MAINTENANCE SCHEDULE....8
COMPLIANCES....8
DIMENSIONS AND WEIGHTS....9
LABEL LOCATIONS....10
WARNING AND INTENDED USE LABELS....10

ASSEMBLY INSTRUCTIONS

PREASSEMBLY CHECKLIST....12
ASSEMBLY STEPS....14

PREVENTATIVE MAINTENANCE

DAILY INSPECTION AND MAINTENANCE....20
WEEKLY INSPECTION AND MAINTENANCE....20
OTHER SCHEDULED PREVENTATIVE MAINTENANCE....20
CLEANING THE EQUIPMENT....21

WARRANTY INFORMATION

COMMERCIAL LIMITED WARRANTY....22
WARRANTY DETAILS....23
WARRANTY REGISTRATION....24

SAFETY INSTRUCTIONS

IMPORTANT SAFETY INSTRUCTIONS—SAVE THESE INSTRUCTIONS

FACILITY AND USER SAFETY PRECAUTIONS

- Review and understand all of the warning labels affixed to this machine and on the facility safety sign.
- Be certain that the machine operation is understood before it is used. Refer to the instructional procedure label affixed to the machine.
- Make sure all users are properly trained on how to use this equipment. If this machine is being used in a commercial setting, end users may not have access to this owners manual. It is the responsibility of the facility to instruct users as to the proper usage of the equipment as well as making them aware of potential hazards. Maximum user weight is 400 lbs / 182 kg.
- Use each machine only for the intended exercise. Do not allow anyone to invent exercises not included on the instructional procedure label or the intended use label.
- Do not modify the machine.
- This equipment meets industry safety standards for stability when used for the intended exercise. Do not allow straps, resistance bands or other means to be attached to the framework of this machine to perform stretching or body weight exercises. This can result in machine instability and lead to serious crushing injuries.
- Keep children away from this equipment. Adults should closely supervise use by teenagers.
- It is recommended that users receive a thorough medical exam before commencing an exercise program. All medical issues should be reviewed to ensure that weight training will not aggravate pre-existing medical conditions.
- If the machine appears damaged or inoperable, contact a facility staff member to place an "OUT OF ORDER, DO NOT USE" sign on the machine until it is repaired. Only use TRUE supplied replacement components to service this machine.
- Instruct users not to wear loose or dangling clothes or have headphone wires hanging when using this equipment.
- Do not attempt to free any jammed assemblies by yourself as this may cause injury.
- On Plate Loaded and Free Weight machines:
    - Use of spotter(s). Instruct users to seek the advice of the facility staff as to the appropriate use of spotters when lifting. More than one spotter may be required depending upon the amount of weight being lifted.
    - Instruct users to load weight plates evenly and carefully to avoid tipping equipment and crushing injuries.
    - If the machine is equipped with safety stops or catches, inspect them and verify their proper operation before use and make sure they are securely in place before using or exiting the machine. Be certain members are instructed on how to operate and adjust all safety mechanisms.
    - This equipment is designed for standard olympic size weight plates with a 50mm bore (1.9").
    - Do not exceed the maximum weight capacity of the machine. Maximum plate size is 45 lbs / 20 kg.

INSTALLATION SAFETY PRECAUTIONS

- Read this installation manual entirely before assembling this equipment.
- Verify that there is adequate space surrounding this piece of equipment for safe access and operation. Installation must meet ADA requirements for accessibility.
- Install this piece of equipment on a solid level surface that does not deviate more than 1/8″ over a 10′ distance (or as defined and required by local building and architectural codes).
- **DO NOT** install any fitness equipment near a pool, hot tub or other damp locations. Corrosion caused by installation in these locations can lead to premature failure of components.
- **Be sure all hardware is tight before using this equipment.**
- Some assembly materials may come preassembled in the carton. Refer to the Assembly Instructions for more information on disassembling any assembly materials before beginning assembly.

EQUIPMENT INSTALLATION AND STABILITY

- TRUE Fitness designs its products to be stable when used as intended.
- Training environments vary, and TRUE Fitness cannot predict the specific conditions under which users will set up or operate our products.
- To ensure safety and optimal performance, TRUE Fitness strongly recommends that all flexibility and strength training equipment be securely anchored to a solid, level surface.
- Anchoring holes are provided on the feet of the frame. All anchoring locations must be used when anchoring the equipment to the floor. Proper anchoring prevents instability, rocking, or tipping during use.
- Regardless of the fastener type or method used, each anchoring fastener must withstand a minimum pull-out force of 3.3 kN (750 lbs) from the floor to ensure proper stability and safety compliance.
- It is the facility's responsibility to ensure installation complies with all applicable local and regional building codes and that equipment is installed according to manufacturer guidelines.
- A licensed contractor or structural engineer should be consulted to verify that installation methods meet local building regulations and are appropriate for the specific type of flooring used.
- TRUE Fitness shall not be held liable for any injuries, damages, or equipment malfunctions resulting from failure to properly secure or bolt equipment to the floor or from improper installation practices.
- If two assembled units are linked together, it is strongly recommended that both units be anchored to the floor.

MAINTENANCE SAFETY PRECAUTIONS

- Refer to the maintenance schedule table in this manual for when to perform maintenance.
- Check the function of your machine DAILY by verifying the following:
  - Verify that all adjustments are possible and carried out with ease. Make sure that each adjustment pin inserts completely into each position without binding.
  - Verify that safety catches and stops are in proper working order and engaged.
  - Verify that the exercise is performed smoothly, free of noise, and/or binding.
- Check the function of your machine WEEKLY by verifying the following:
  - Nuts, Bolts, and Fasteners: check tightness weekly. If any hardware has become loose, retighten it, use Loctite® Threadlocker 242, or both.
  - Frames and Lifting Arms: Inspect weekly for integrity and function. Replace any component at first signs of wear. Use only TRUE supplied components.
- Replace any warning label at the first sign of wear. Labels and the facility safety sign may be obtained from TRUE.

GENERAL CARE AND MAINTENANCE

IMPORTANT

Preventative maintenance is crucial to maintaining the function and safety of this equipment. Your facility must establish written guidelines for preventative maintenance and keep written or online records of the maintenance performed on these products. As a minimum, the items presented in the SAFETY section of this document and the items that follow here, should be included in your maintenance program.

- Nuts, bolts, and fasteners—check tightness weekly. If any hardware has become loose, retighten and/or use Loctite® brand Threadlocker 242. Be sure all hardware is tight before using the machine.
- Safety catches—inspect catches, stop rods and their associated fasteners. Tighten any loose hardware and replace any components at first signs of wear.
- Frames—sweat, disinfecting sprays and spills can lead to corrosion which may lead to premature failure of components. Wipe all machines down with a damp cloth and dry completely each day. This includes painted parts, chrome parts and upholstered pads.
- Painted and chrome plated parts—use Simple Green with a dilution of 32:1 or similar cleaner for light dirt and grime. Use Turtle Wax Polishing Compound or a good car polish to remove heavier dirt and grease as well as for polishing. DO NOT use solvents, lacquer thinner, acetone or finger nail polish remover. For scuffs and marks that are not removed by the above methods use a soft scrub cleanser. Make sure all parts are dry upon completion.
- Exercise instruction labels—clean with soap and water as needed.
- Bronze bushings—check monthly for signs of wear and replace as needed.
- Linear bearing shafts—wipe any accumulation of dust or other contaminants from the shafts on a weekly basis. Apply a thin layer of a Teflon® (PTFE) grease on a weekly basis. TRUE recommends Magnalube® brand.
- When replacing any component, use only TRUE supplied parts.
- Be sure all hardware is tight before using the machine.

Retain these instructions for future reference. If you have any questions, do not hesitate to contact your TRUE dealer or TRUE product support (service@truefitness.com | 800.883.8783).

COMMERCIAL MAINTENANCE SCHEDULE

Commercial Maintenance Schedule					
	Daily	**Weekly**	**Monthly**	**6 Months**	**Annually**
Inspect all nuts and bolts and tighten if needed.		X			
Inspect safety catches, stop rods, and their fasteners. Replace at the first sign of wear.	X				
Inspect all anti-slip surfaces and replace as needed.		X			
Inspect all adjustment pins, set screws, and gas shocks if equipped.	X				
Inspect all accessory bars and handles.		X			
Inspect all safety and instructional decals.	X				
Clean and condition upholstery.	X				
Clean and polish frame.	X				
Clean and polish chrome.	X				
Lubricate pivot bearings and linear bearings.				X	

COMPLIANCES

This equipment complies with all applicable codes and regulations. For a complete list of compliances, please visit www.truefitness.com.

DIMENSIONS AND WEIGHTS

- **ASSEMBLED DIMENSIONS (W X D X H)**
  55.5" x 70" x 37.5" / 141 cm x 177.8 cm x 95.2 cm

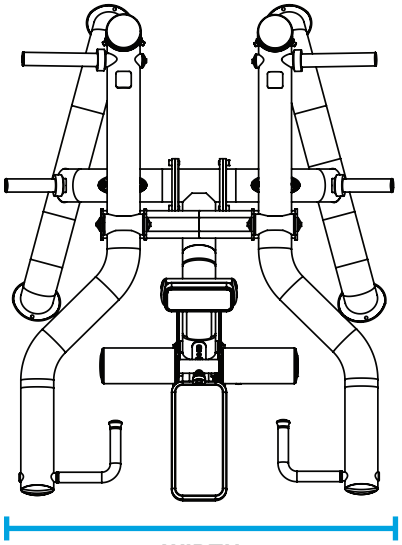

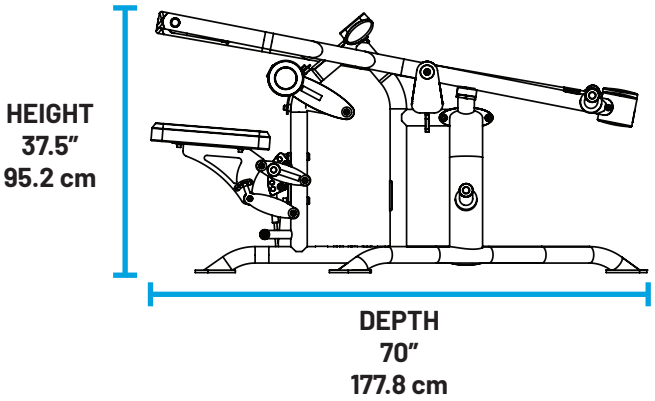

- **PRODUCT WEIGHT**
  364 lbs / 165 kg
- **MAXIMUM USER WEIGHT**
  400 lbs / 182 kg
- **MAXIMUM LOAD (USER WEIGHT + WEIGHT PLATES)**
  1300 lbs / 590 kg

POST CAPACITY					
Number of Active Posts	Max 45LB. Plates Per Active Post	Total Weight Plates Allowed	Number of Storage Posts	Max 45LB. Plates Per Storage Post	Total Weight Plates Allowed
2	6	12	2	4	8

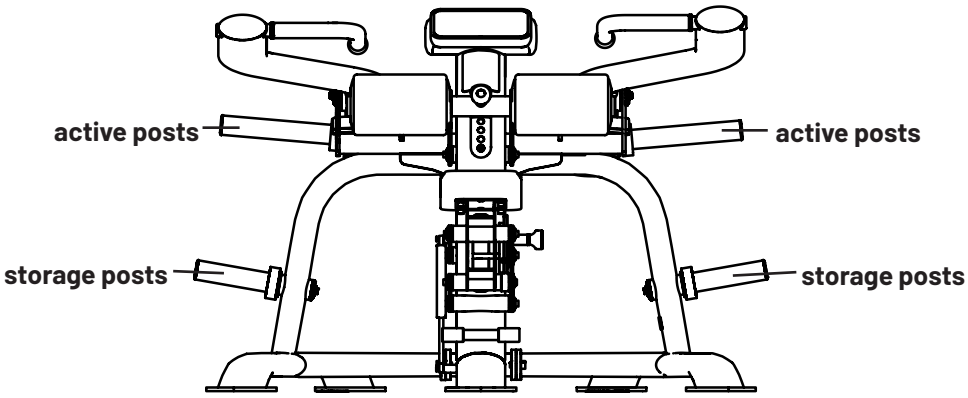

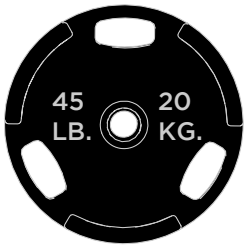

LABEL LOCATIONS

Item	Part#	Description	Qty
1	LBL-ADJ-SPL013	LABEL, ADJUSTMENT KNOB YELLOW	2
2	LBL-ADJ-SPL010	LABEL, SEAT ADJ POSITION INDICATOR ARROW SPL	1
3	LBL-ADJ-PLS027	LABEL, PLS SEAT ADJ	1
4	LBL-WRN-PLS002	LABEL, 6 PLATE WARNING	2
5	B2065	LABEL, WARNING, COMPLETELY INSERT PIN	2
6	LBL-PRO-PLS900	LABEL, PLS0900 PROCEDURE	1
7	LBL-WRN-PLS001	LABEL, GENERAL WARNING	1
8	LBL-MTN-PLS001	LABEL, MAINTENANCE	1
9	LBL-LOG-010BK	LABEL, 10" NEW TRUE LOGO, WHITE	1
10	SPL-00-LBLSN	LABEL, SERIAL NUMBER	1

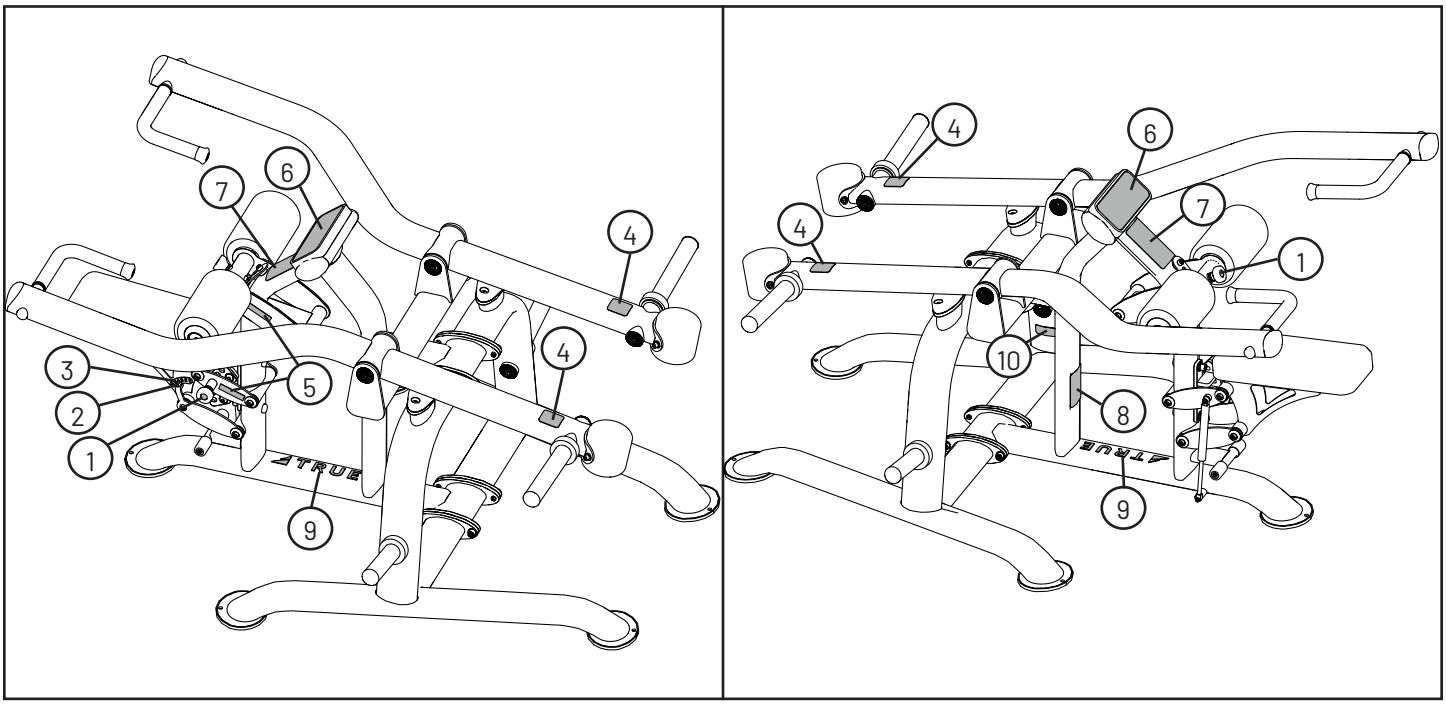

WARNING AND INTENDED USE LABELS

⚠ **WARNING:** Replace all labels that may be worn, damaged, or missing.

To replace any worn or missing decals contact TRUE product support (service@truefitness.com | 800.883.8783).

Part# and Description	Image
LBL-ADJ-SPL013 (Adjustment Knob)	
LBL-ADJ-SPL010 (Adjustment Arrow)	

Part# and Description	Image
LBL-ADJ-PLS027 (Seat Adjustment)	
LBL-WRN-PLS002 (Plate Weight)	
B2065 (Pop Pin Warning)	
LBL-PRO-PLS900 (Placard)	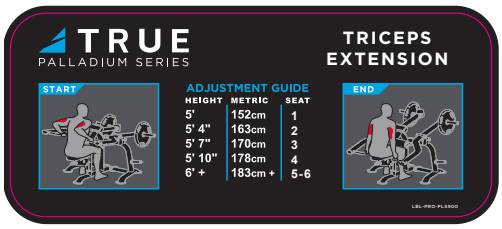
LBL-WRN-PLS001 (General Warning)	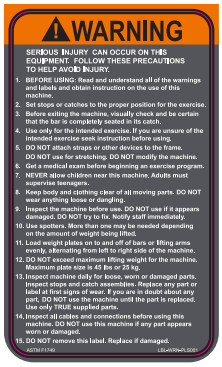
LBL-MTN-PLS001 (Maintenance)	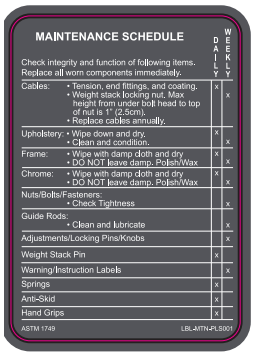
LBL-LOG-010BK (Logo)	
SPL-00-LBLSN (Serial Number)	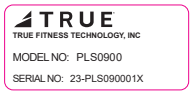

ASSEMBLY INSTRUCTIONS

NOTE: Supplemental video available @TRUEFitnessServiceVids: https://youtu.be/hUSSREKEpD4

PREASSEMBLY CHECKLIST

CAUTION:

Use caution when assembling this product.
Unpacking and assembling this product requires two or more people.

Use caution when unpacking this product. Avoid damage to the product and product pads.
DO NOT use a box cutter. DO NOT slice into the packaging.

VERIFY BOX CONTENTS

IMPORTANT! Please verify all box contents. If you have questions, or if there are any missing parts, contact product support (service@truefitness.com | 800.883.8783).

TOOLS NEEDED FOR ASSEMBLY	
Wire Cutters or Scissors (used in unboxing the machine)	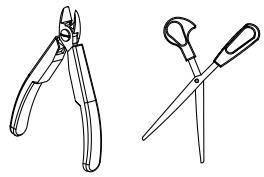
#2 Phillips Screwdriver or Electric Screwdriver (both are optional in unboxing the machine)	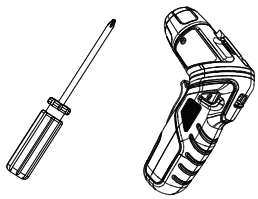
5/16" and 3/8" Allen Wrenches (or ratcheting socket wrench with hex bits - ball end recommended)	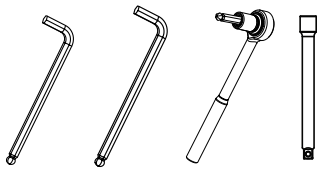
Rubber Mallet	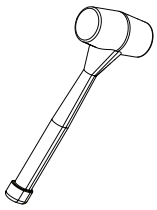

THIS PRODUCT SHIPS IN MULTIPLE CARTONS.
ENSURE YOU HAVE ALL PARTS SHOWN BEFORE ASSEMBLING THE EQUIPMENT.

BOX CONTENTS		
Item	**Image**	**Qty**
Center Frame Assembly	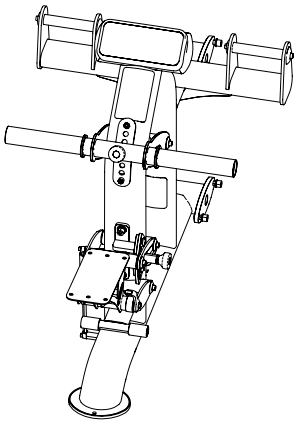	1
Right Side Frame Assembly	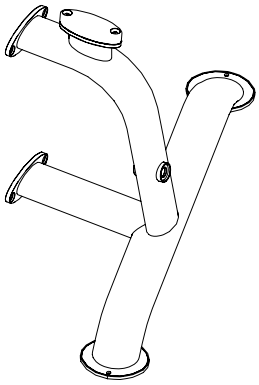	1
Left Side Frame Assembly	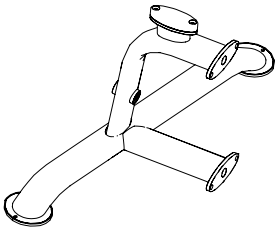	1

BOX CONTENTS		
Item	**Image**	**Qty**
Right Arm Assembly	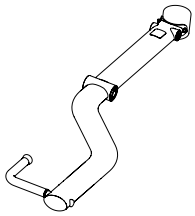	1
Left Arm Assembly	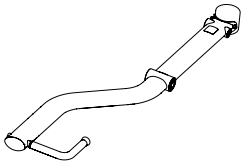	1
Active Weight Post Assemblies (Long)	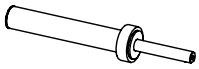	2
Storage Weight Post Assemblies (Short)	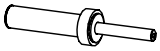	2
Seat Pad Assembly	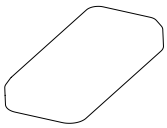	1
Roller Pad Assembly	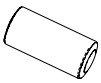	2
Pad Kit Hardware Bag	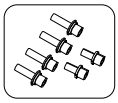	1
Manual		1

ASSEMBLY STEPS

STEP 1—ASSEMBLE FRAME

Tools Used in this Step	
3/8" Allen Wrench	

Parts Used in this Step			
ITEM	PART#	DESCRIPTION	QTY
1	PLS-09-MFR125X	ASSEMBLY, PLS0900 LEFT FRAME	1
2	PLS-09-MFR025X	ASSEMBLY, PLS0900 RIGHT FRAME	1
3	PLS-09-MFR230X	ASSEMBLY, CTR PLS0900 SEAT FRAME	1
4	C 640A	SHCS, 1/2"-13 X 1", BLK	8
5	C 750B	LOCK WASHER, 1/2MED.SPLIT, BLACK BED	8

A. Remove and set aside the preassembled socket head cap screws and lock washers from the base frame assemblies.

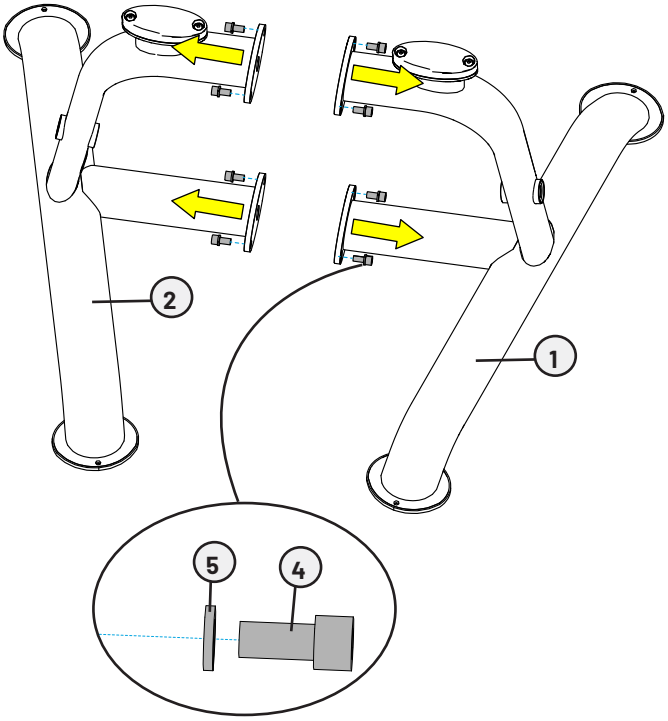

B. Using two people, carefully line up the right and left side frame assemblies with the seat frame assembly and finger tight the previously removed socket head cap screws and lock washers.

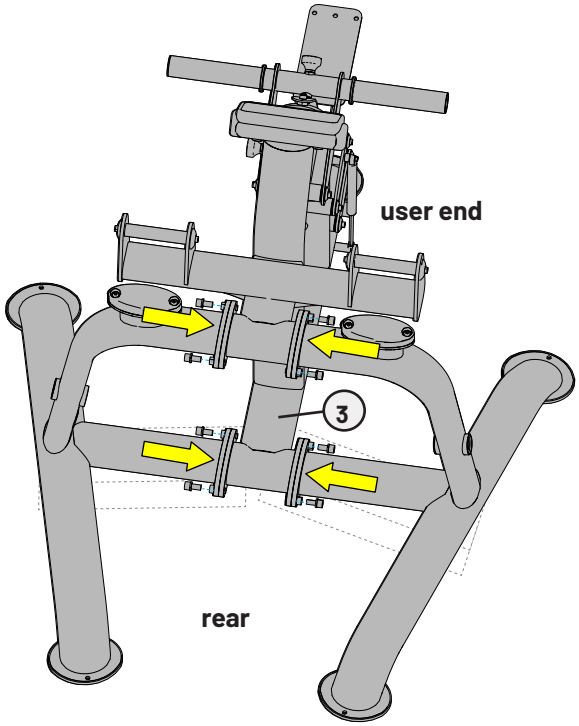

NOTE: As you align the parts together, it helps to use the styrofoam from the packaging to place under the frame pieces.

NOTE: The wide opening is the user end. The narrow opening is the rear.

STEP 1—ASSEMBLE FRAME CONTINUED

C. When all 8 socket head cap screws and lock washers are finger tight, use a 3/8" allen wrench to fully tighten.

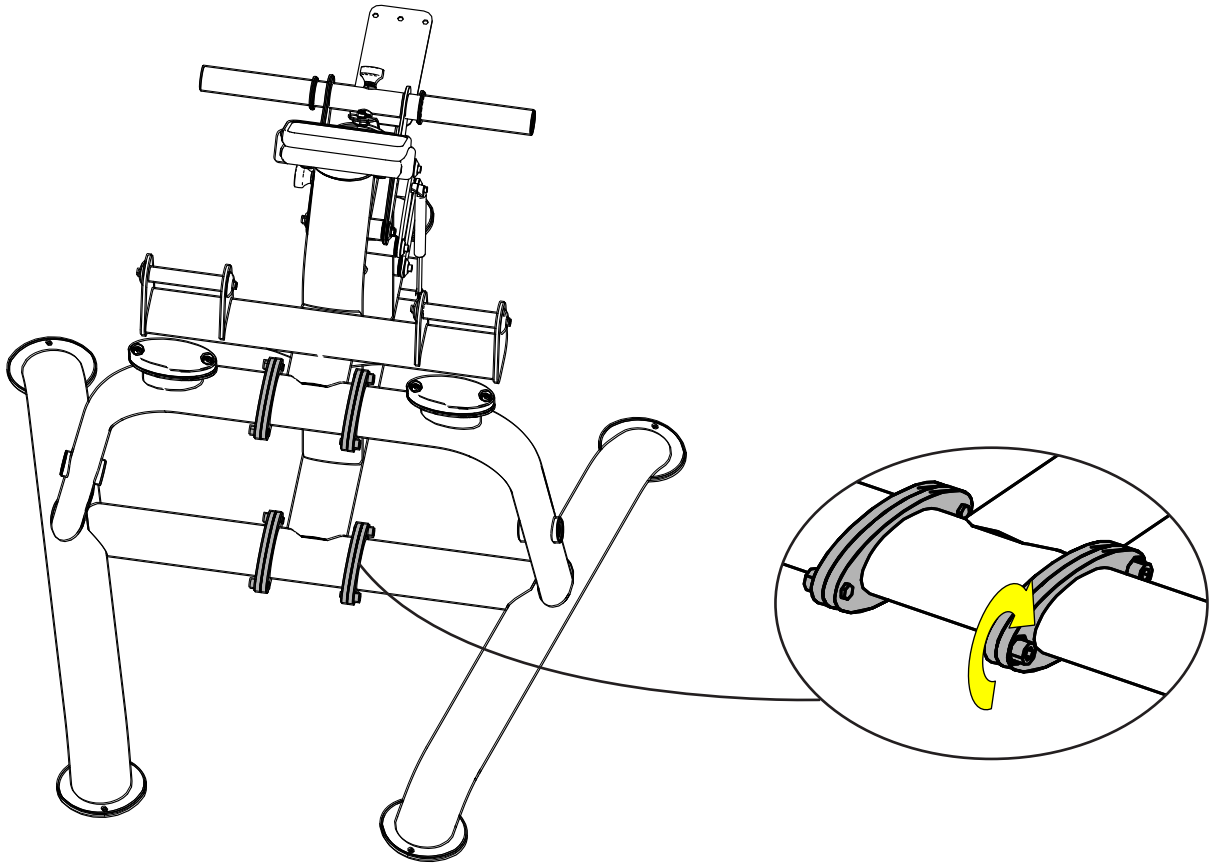

STEP 2—ATTACH ARMS

Tools Used in this Step	
5/16" Allen Wrench	
Rubber Mallet	

Parts Used in this Step			
ITEM	PART#	DESCRIPTION	QTY
1	PLS-09-ARM115X	ASSEMBLY, PLS0900 USER LEFT ARM	1
2	PLS-09-ARM015X	ASSEMBLY, PLS0900 USER RIGHT ARM	1
3	PLS-01-AXL001	AXLE, PIVOT	2
4	PLS-00-CAP005	ALM BOLT CAP	4
5	C 622A	SHCS, 3/8"-16 X 3/4"	4
6	C 749B	LOCK WASHER, 3/8", BLK ZP	4

A. Using a 5/16" allen wrench, remove and set aside the socket head cap screws, lock washers, caps, and axles from the right and left frame assemblies.

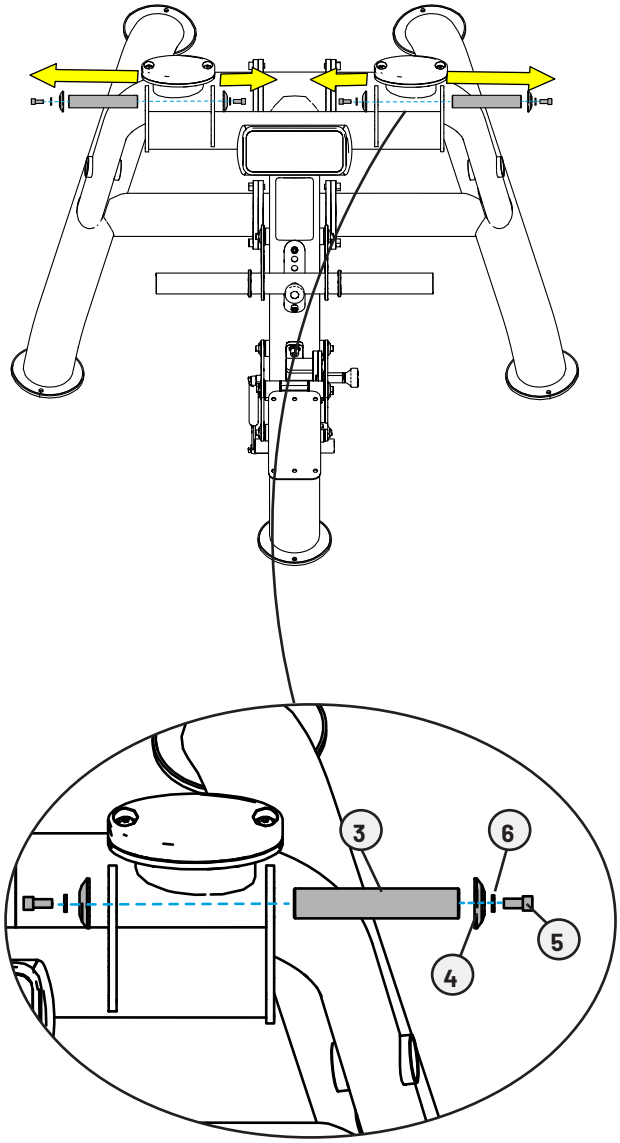

B. Using two people, carefully attach the arms:
   a. Place the left arm assembly in between the brackets of the left frame assembly.
   b. Line up flat edge of the axle with the flat edge of the frame/shaft and using a rubber mallet, lightly tap the axle into the shaft.
   c. Using a 5/16" allen wrench, attach the socket head cap screws, lock washers, and caps to secure the left arm to the left frame.
   d. Repeat for the right arm.
   e. Using a 5/16" allen wrench, verify the counter weights are securely fastened to both arms and that all hardware has been fully tightened.

PLS-09-ARM115X

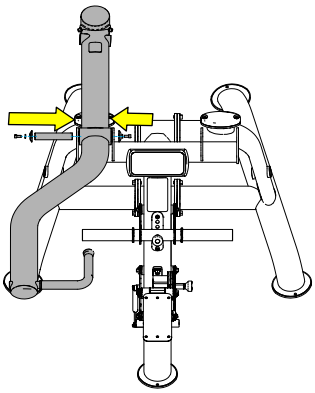

PLS-09-ARM015X

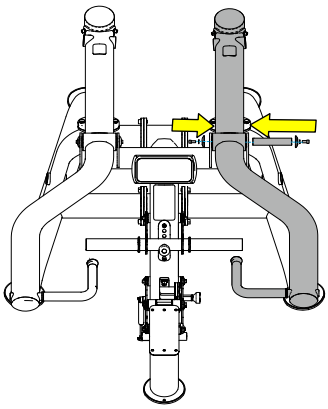

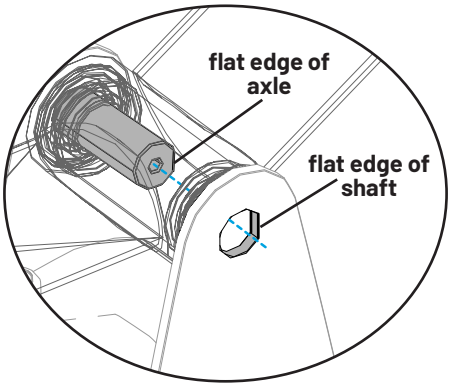

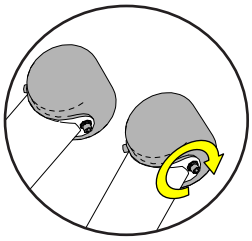

STEP 3—ATTACH WEIGHT POST ASSEMBLIES

Tools Used in this Step	
5/16" Allen Wrench	
Rubber Mallet	

Parts Used in this Step			
ITEM	PART#	DESCRIPTION	QTY
1	PLS-00-PST000X	ASSEMBLY, PLS WEIGHT HORN (ACTIVE-LONG)	2
2	PLS-00-PST020X	ASSEMBLY, WEIGHT HORN (STORAGE-SHORT)	2
3	PLS-00-CAP005	ALM BOLT CAP	4
4	C 749B	LOCK WASHER, 3/8", BLK ZP	4
5	C 622A	SHCS, 3/8"-16 X 3/4"	4

A. Using a 5/16" allen wrench, remove and set aside the socket head cap screws, lock washers, and caps from the active and storage weight post assemblies.

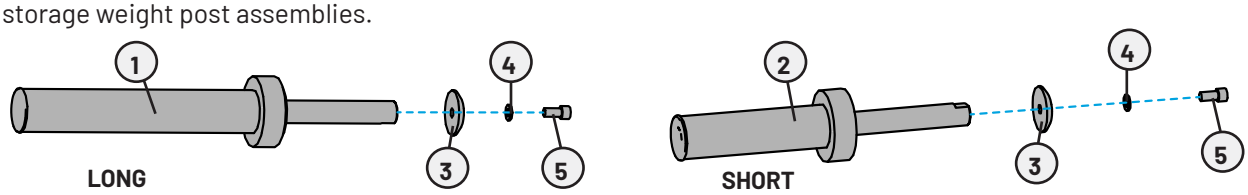

B. Attach the active (long) weight post assemblies to the arm assemblies and attach the storage (short) weight post assemblies to the side frame assemblies:

a. Line up flat edges of the weight post axles with the flat edges of the shafts and using a rubber mallet, lightly tap the weight post axles into the shafts.

b. Using a 5/16" allen wrench, attach the socket head cap screws, lock washers, and caps to secure the weight post assemblies to the frame.

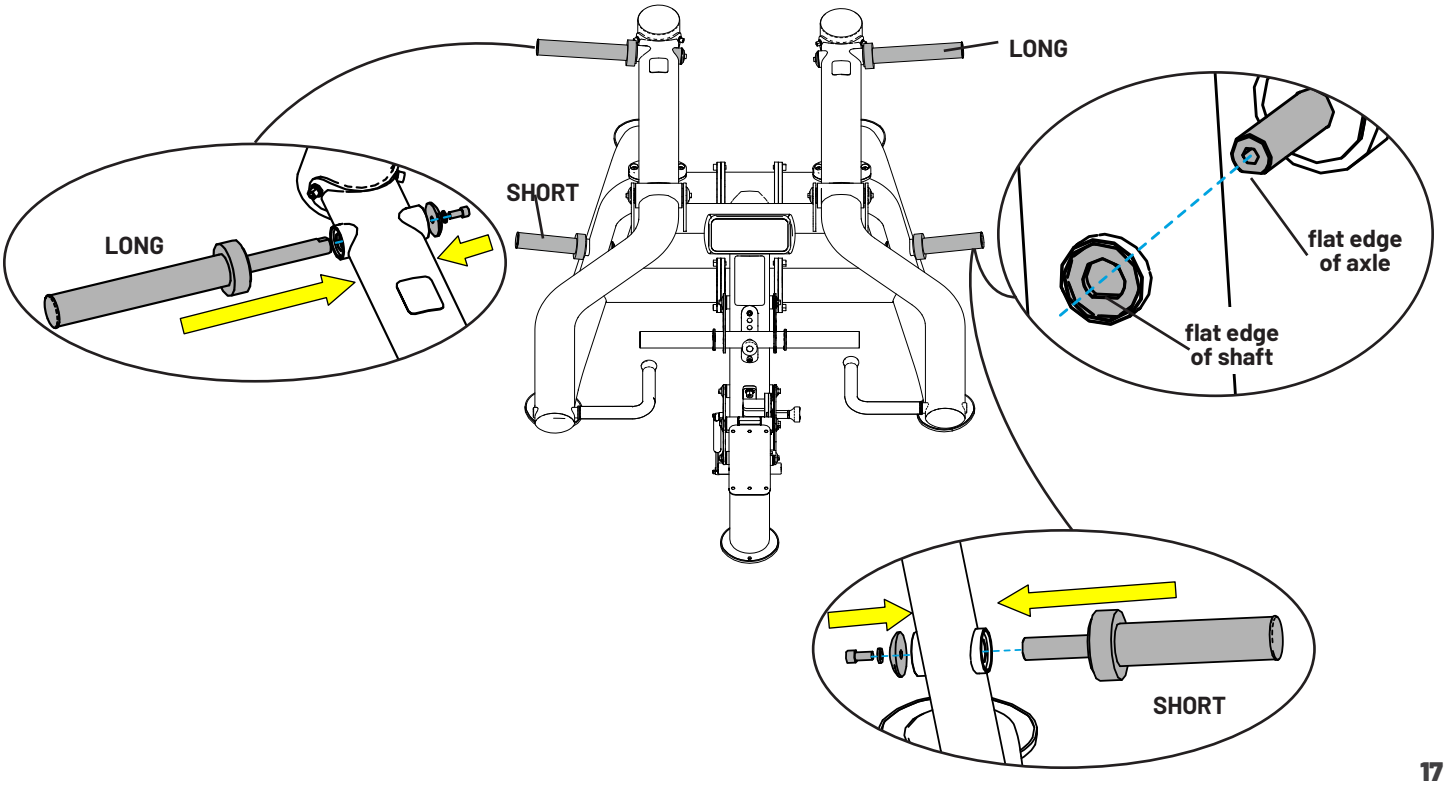

STEP 4—ATTACH PADS TO SEAT FRAME

Tools Used in this Step	
5/16" Allen Wrench	

Parts Used in this Step			
ITEM	**PART#**	**DESCRIPTION**	**QTY**
1	PLS0900 PAD KIT	PAD KIT PLS	1
PAD KIT HARDWARE			
2	C 624A	SHCS, 3/8"-16, 1-1/4" BLACK	4
3	C 749B	LOCK WASHER, 3/8", BLK ZP	6
4	C 754B	WASHER, FLAT, 3/8" SAE, BLK	4
5	C1256	LPSHCS, 3/8"-16 X 1" E-COAT	2
6	SPL-11-ADJ157	ROLLER PAD WASHER	2

A. Using a 5/16" allen wrench, attach the four socket head cap screws, lock washers, and flat washers to secure the seat pad assembly to the seat frame assembly.

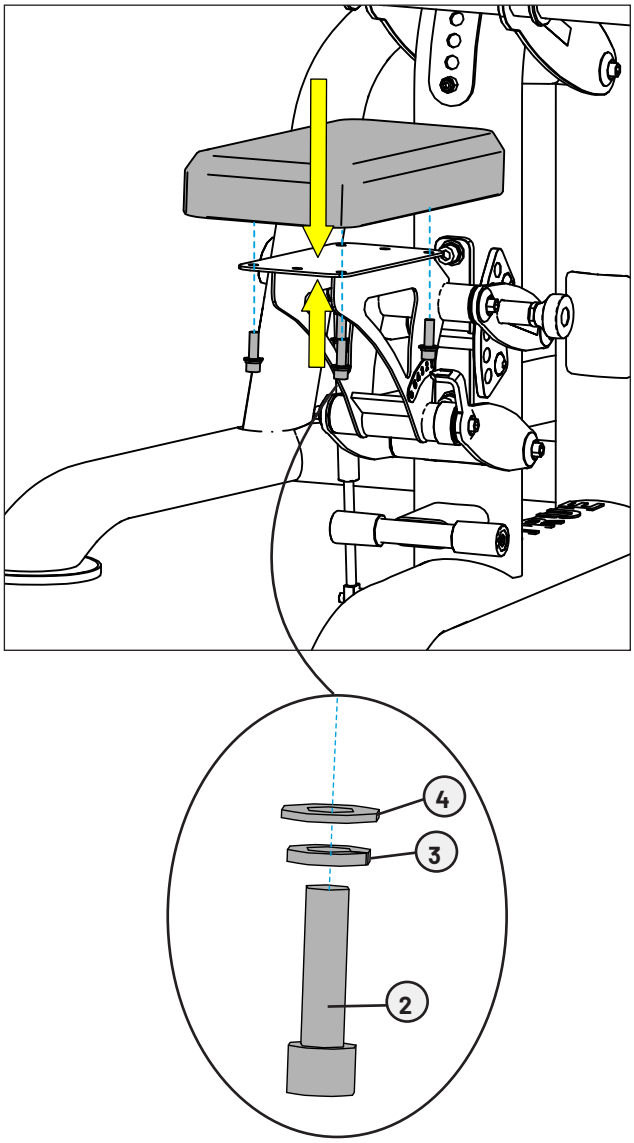

B. Using a 5/16" allen wrench, attach the two socket head cap screws, lock washers, and flat washers to secure the two roller pad assemblies to the center frame assembly.

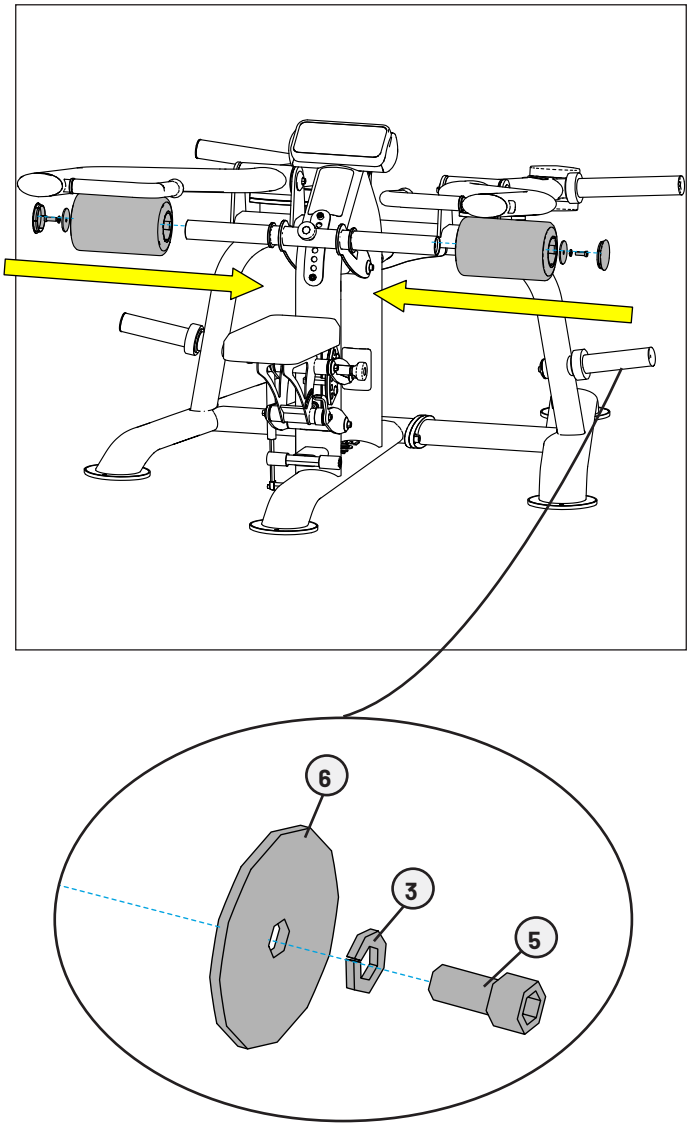

STEP 5—VERIFY ALL ADJUSTMENTS FUNCTION AS INTENDED

Pull the pop pin out and place it into each of the adjustment holes for both the center pad assembly and the seat assembly.

NOTE: The pad and seat assembly both have six adjustment holes.

IMPORTANT! Verify the pin inserts in and out of each hole completely.

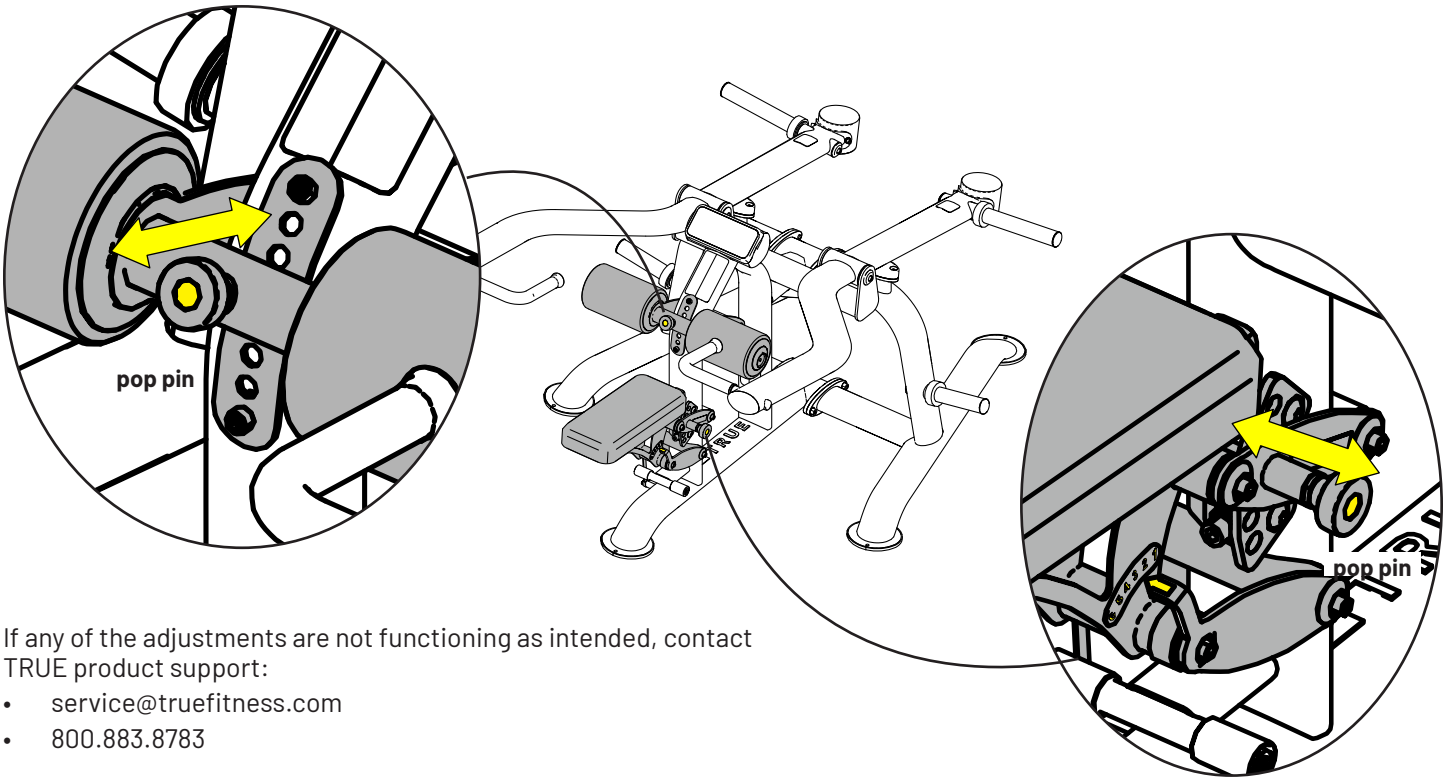

If any of the adjustments are not functioning as intended, contact TRUE product support:

- service@truefitness.com
- 800.883.8783

STEP 6—REMOVE PROTECTIVE FILM FROM LOGO

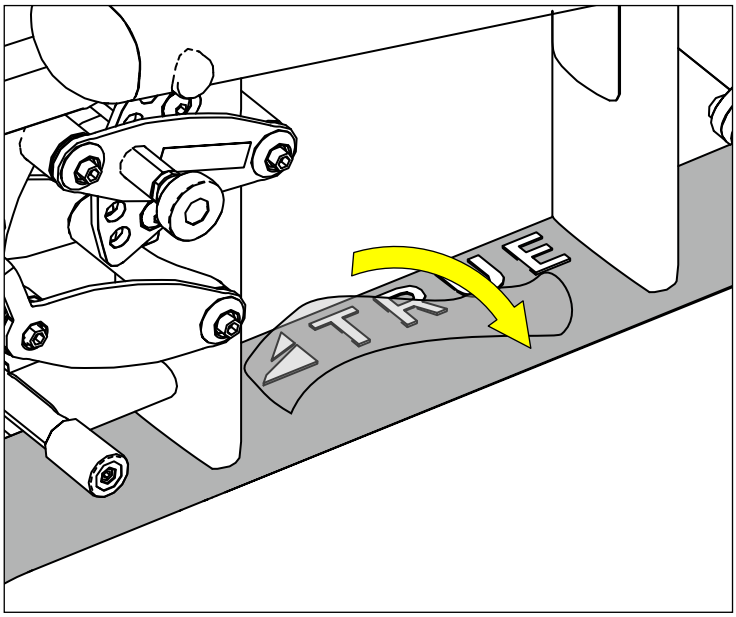

PREVENTATIVE MAINTENANCE

Preventative maintenance is crucial to maintaining the function and safety of this equipment. Your facility must establish written guidelines for preventative maintenance and keep written or online records of the maintenance performed on these products. As a minimum, the items presented in the Safety Instructions section of this document and the items that follow here, should be included in your maintenance program.

IMPORTANT! Always purchase replacement parts from TRUE. Many parts are tested and manufactured specifically for TRUE equipment. Use of unapproved parts may cause serious injury and/or void the limited warranty.

DAILY INSPECTION AND MAINTENANCE

The following items are critical to the safety of users and maintenance staff as well as ensuring the optimum performance of the machines. These inspections should be performed each day before the equipment is subject to use. TRUE is not responsible for performing or scheduling regular maintenance or inspections.

- Inspect for cleanliness. Wipe and dry the upholstery, frame, and chrome. (See cleaning the equipment.)
- Inspect all adjustment pins, weight stack pins, set screws, gas shocks, snap links, and pulleys if equipped.
- Inspect all safety and instructional decals.
- Inspect all weight stack shields if equipped.
- Verify that rubber hand grips are intact and secure.
- Verify that anti-skid foot grips are intact and secure.

WEEKLY INSPECTION AND MAINTENANCE

The following items are critical to the safety of users and maintenance staff as well as ensuring the optimum performance of the machines. These inspections should be performed each week. TRUE is not responsible for performing or scheduling regular maintenance or inspections.

- Verify that the adjustment pop pins retract easily and fully engage (when released) into each adjustment disc hole/slot. The pop pins are spring loaded so they should return to the engaged position when you release the knob.
- Verify that the adjustment pin disengages and engages freely when actuating the adjustment mechanism. Be sure that the adjustment pin inserts fully into the adjustment disc.
- Verify that all hardware is tight and that associated frame members are secure. Apply a few small drops of a thread locking compound such as Loctite® on any loose bolts.
- Inspect frame for integrity and function. Replace any components at the first sign of wear with only TRUE supplied parts.

OTHER SCHEDULED PREVENTATIVE MAINTENANCE

TRUE recommends that scheduled maintenance be performed by a qualified service technician. Please contact your dealer or visit www.truefitness.com to contact a local TRUE authorized service technician.

Monthly

Clean guide rods and lubricate with a Teflon grease if equipped with guide rods.

Every 6 Months

Lubricate pivot bearing and linear bearings with lithium grease.

CLEANING THE EQUIPMENT

Daily Cleaning

Wipe all machines with a water dampened cloth and dry completely. This includes painted parts, chrome plated parts (except guide rods), plastic parts, and upholstered pads. It is important not to leave parts damp. This will increase the potential for corrosion to occur.

⚠**CAUTION:** Certain anti-bacterial cleaners and other harsh cleaning agents can induce corrosion on the machine components. These solutions can also dry out and cause cracking and splitting on the upholstery.

Heavy Duty Cleaning

- Guide Rods (if equipped)—Clean and lubricate with a Teflon Spray. Be sure to coat the entire guide rod. Spraying lubricant into the cap plate bushings is also recommended.
- Chromed Adjustment Tubes—Wipe away dust and dirt before applying a Teflon spray lubricant. TRUE recommends using Tri-Flow™ or a similar brand.
- Linear Bearings—Clean the linear shaft and lubricate (as required) with Teflon based grease. Keeping linear bearings clean and lubricated is critical to long life and good performance.
- Painted Frames—If you have scuff marks, grease or a heavy dirt buildup on frame components, start with a mild soap solution or a diluted solution of a product such as Simple Green with a dilution of 32:1. If you cannot remove the marks using those methods, use a car polish/cleaner. **DO NOT** use solvents such as lacquer thinner, mineral spirits or acetone. For deeper scuff marks, use an automobile finish rubbing compound.
- Upholstery—For heavy duty cleaning, use a mild soap solution. This method should be sufficient in the majority of instances. In severe stain cases, you can use a solution of 5-10% household bleach diluted with water. Be sure to test an inconspicuous area first. **DO NOT** use chemical cleaners on the vinyl upholstery. You can also use a lanolin based hand cleaner to clean your upholstery. Wipe off after cleaning with a damp cloth and thoroughly dry.
- Plastic Parts—Use a mild soap solution to clean dirt and grease marks.
- Labels—Use a mild soap solution to clean dirt and grease marks.
- Shrouds—Use a mild soap solution to clean dirt and grease marks.

⚠**CAUTION:** Do not use any acidic cleaners. Doing so will weaken the paint or powder coatings and may void the TRUE Warranty. Never pour or spray liquids on any part of the equipment. Allow the equipment to dry completely before using.

⚠**CAUTION:** If you determine that the equipment needs service, make sure that the equipment cannot be used inadvertently and ensure other users know that the machine needs service.

To order parts or to contact a TRUE authorized service representative, please visit www.truefitness.com.

WARRANTY INFORMATION

ATTENTION OWNER'S: **To ensure you get the most out of your purchase and receive the full benefits of our warranty, you must register your product within 45 days of purchaser's receipt of this product.**

COMMERCIAL WARRANTY

CARDIO				
WARRANTY ITEM	**VAPOR, APEX**	**GRAVITY PLUS**	**GRAVITY**	**ADX, RO, SURGE**
Frame*	10 Years (with registration)	10 Years (with registration)	10 Years (with registration)	5 Years (with registration)
Parts	3 Years	3 Years	3 Years	3 Years
Consoles	3 Years	3 Years	3 Years	2 Years
Labor**	2 Years (with registration)	2 Years (with registration)	1 Year (with registration)	1 Year (with registration)
Wear Items***	180 Days	180 Days	180 Days	90 Days

STRENGTH	
WARRANTY ITEM	**PALLADIUM, FUSE XL, FORCE, FITNESS LINE, ATLAS, XFT, XFW, MP, SM, FT, FS**
Frame*	10 Years (with registration)
Parts	5 Years
Cables and Linear Bearings	1 Year
Labor**	1 Year (with registration)
Wear Items***	90 Days (6 Months for FORCE only)

FLEXIBILITY	
WARRANTY ITEM	**STRETCH**
Parts	1 Year
Wear Items***	90 Days

Warranty does not cover damage or equipment failure resulting from or caused by improper assembly/installation, accident, misuse, abuse, unauthorized modification, or failure to provide reasonable and necessary maintenance.

***Frame is the serialized base of the unit and does not include paint or coatings. Frame warranty will equal that of parts warranty unless, within 45 days of purchaser's receipt of this Product (A) the warranty is registered on-line or (B) if the form provided with equipment is filled in, signed by the original purchaser, and mailed to TRUE.**

****Labor warranty is available for equipment located within United States. TRUE Fitness equipment is automatically covered under a 6-month Limited Labor Warranty. This 6-month Limited Labor Warranty begins from the date of purchase shown by a valid receipt. If a valid receipt is not available, the 6-month Limited Labor Warranty period begins from the date of manufacture on the originally purchased equipment.**

*****Wear Items include: batteries, covers, caps, badges, paint, pedal straps, toe clips, elliptical pedal inserts, foot pads, Coax/TV, HDMI, USB, mirroring or Ethernet connections, and safety key.**

See Warranty Details for product registration requirements, terms, conditions, and complete coverage details.

ATTENTION OWNER'S: **To ensure you get the most out of your purchase and receive the full benefits of our warranty, you must register your product within 45 days of purchaser's receipt of this product.**

WARRANTY DETAILS

All TRUE Fitness products are distributed by TRUE and are warranted to the original product purchaser and the parts of the TRUE product (the "Product") listed below. During the applicable Warranty Period, the Product, under normal use and service, shall be free of manufacturing defects in workmanship and materials.

NOTE:

- Standard shipping is included with warranty part replacement.
- Shipping for warranty frame or replacement is included for the period of three years from the original date of purchase.

All Warranty Items are "LIMITED"

- This limited warranty does not cover damage or equipment failure resulting from or caused by improper assembly/installation, failure to follow instructions and warnings in owner's manual, accident, misuse, abuse, unauthorized modification, failure to provide reasonable and necessary maintenance, software version upgrades, compatibility with third party/aftermarket hardware, software, applications, or websites.
- TRUE's liability shall under no circumstances exceed the actual amount paid by you for the product, nor shall TRUE under any circumstances be liable for any consequential, incidental, special or punitive damages or losses, whether direct or indirect.
- Some states or countries do not allow the exclusion or limitation of incidental or consequential damages, so the above limitation or exclusion may not apply to you.
- TRUE will neither assume nor authorize any person to assure for us any other obligation or liability concerning the sale of this Product. Under no circumstances shall TRUE be liable under this warranty, or otherwise, of any damage to any person or property, including any lost profits or lost savings, for any special, indirect, secondary, incidental, or consequential damages arising out of the use of or inability to use this Product.
- This limited warranty, which is given expressly and in lieu of all other express warranties, constitutes the only warranty made by TRUE.
- The remedies described herein are your sole and exclusive remedies and TRUE's entire liability for any breach of this limited warranty.
- No one is authorized to change, modify, or extend the terms of this limited warranty.
- This limited warranty is in lieu of all other warranties of any kind either expressed or including but not limited to implied warranties of merchant.
- This limited warranty applies to the product only while the product remains in the possession of the original purchaser and is not transferable.
- This limited warranty becomes VALID ONLY if the Product is initially assembled/installed by a TRUE authorized dealer/technician (if anyone other than a TRUE authorized dealer/technician initially assembles and installs the Product, this limited warranty will be void unless the written authorization of TRUE is first obtained).
- The "Warranty Period" for this limited warranty shall be for the duration forth in the applicable charts, beginning from the date of original purchase; provided, however, except to the extent prohibited by applicable law, the "Warranty Period" shall only be six months for labor (from the date of original purchase) unless, within 45 days of purchaser's receipt of this Product (A) the warranty is registered on-line or (B) if the form provided with equipment is filled in, signed by the original purchaser, and mailed to TRUE.
- All serial numbers must be intact on the Product for this limited warranty to be valid.
- Installation or download of any 3rd party or after-market products will result in voided warranty. This includes, but is not limited to, electrical and mechanical parts, software, or applications.
- TRUE will ship to an authorized service provider any new or rebuilt replacement part or component, or at our option, replace or refund the Product.
- Replacement parts are warranted for the remaining portion of the original warranty period.
- Proof/receipts of necessary maintenance may be required within 30 days of requested warranty part or service.
- This limited warranty does not apply to the performance of the heart rate accuracy will not be warranted as performance varies, based on user's physiology, age, method of use, and other external factors.

ATTENTION OWNER'S: **To ensure you get the most out of your purchase and receive the full benefits of our warranty, you must register your product within 45 days of purchaser's receipt of this product.**

WARRANTY REGISTRATION

Thank you for purchasing a TRUE product!

To ensure you get the most out of your purchase and receive the full benefits of our warranty, **you must register your product within 45 days of purchaser's receipt of this product**.

How to register your product:

- **Online:**
  Simply visit our website at truefitness.com and register your product warranty in one simple step.
- **QR Code:**
  Scan the QR code below with your smartphone to be taken directly to the registration page.
- **By Mail:**
  Complete the information below and mail to:
  TRUE Product Support
  1 GLAZER WAY
  ST. CHARLES, MO 63301

PLEASE RETAIN THIS PORTION FOR YOUR RECORDS
BASE SERIAL NUMBER:

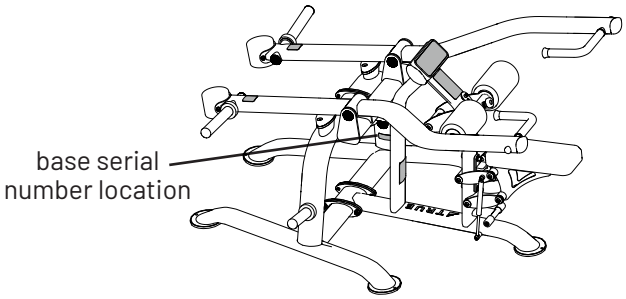

TRUE
TRUE FITNESS TECHNOLOGY, INC
MODEL NO: PLSXXXX
SERIAL NO: 23-PLSXX00000
SAMPLE

Warranty Registration

Base Serial Number

Purchase Date

Company (if applicable)

Customer Name (First and Last)

Email Address

Phone Number

Street Address

City

State

Postal Code

Country

TRUE FITNESS

CONTACT US
service@truefitness.com
1.800.883.8783

Office: 1 Glazer Way, St. Charles, MO 63301
Shipping: 3831 Mueller Rd, St. Charles, MO 63301

TRUEFITNESS.COM

MAN-PLS0900 Owner's Manual, Assembly Guide, and Warranty Card
REV07
© 2026 TRUE Fitness All Rights Reserved.