TRUE

* Assembly Guide & Warranty Card Included

RC900 RECUMBENT BIKE OWNER'S MANUAL

Model# RC900

Revision 091418

RC900 UPRIGHT BIKE OWNERS MANUAL

IMPORTANT:
All products shown are prototype. Actual product delivered may vary.
Product specifications, features & software are subject to change without notice.
For the most up-to-date owner's manual please visit www.truefitness.com.
For documents in additional languages please visit www.truefitness.com/resources/document-library/

IMPORTANTE:
Todos los productos mostrados son prototipos. La realidad el producto suministrado puede diferir.
Especificaciones de productos, características y software están sujetas a cambios sin previo aviso.
Para la más actualizada de este manual del propietario, por favor visite www.truefitness.com
Para los documentos en otros idiomas, por favor visite www.truefitness.com/resources/document-library/

IMPORTANT: Tous les produits présentés sont prototype. Le produit réel livré peut varier. Spécifications du produit, caractéristiques et logiciels sont sujettes à modification sans préavis. Pour la plus à jour le manuel du propriétaire s'il vous plaît visitez www.truefitness.com. Pour documents dans des langues supplémentaires, veuillez www.truefitness.com/resources/document-library/ de visite

重要提示：显示所有产品的原型。实际交付的产品可能有所不同产品规格，功能和软件如有更改，恕不另行通知迄今为止对于大多数的使用说明书，请访问www.truefitness.com 对于其他语言的文档，请访问www.truefitness.com/resources/document-library/

هام:
جميع المنتجات المعروضة هي النموذج. قد تختلف المنتج الفعلي تسليمها.
مواصفات المنتج، والميزات والبرامج قابلة للتغيير دون إشعار.
لمعظم ما يصل حتى الآن دليل المالك يرجى زيارة www.truefitness.com.
للمستندات في لغات إضافية، يرجى زيارة www.truefitness.com/resources/document-library/

WICHTIG: Alle hier gezeigten Produkte sind Prototypen. Das tatsächliche Produkt ausgeliefert wird, kann variieren. Produkt-Spezifikationen, Funktionen und Software können sich ohne vorherige Ankündigung ändern. In den meisten Fällen bis zu Bedienungsanleitung Bisher besuchen Sie bitte www.truefitness.com. Für Dokumente in weiteren Sprachen finden Sie unter www.truefitness.com/resources/document-library/

BELANGRIJK: Alle getoonde producten zijn prototype. Daadwerkelijke product geleverd kan verschillen. Product specificaties, eigenschappen & software zijn onderhevig aan verandering zonder kennisgeving. Voor de meest actuele handleiding van de eigenaar kunt u terecht www.truefitness.com. Voor documenten in andere talen kunt u terecht op www.truefitness.com/resources/document-library/

ВАЖНО: Все товары указаны прототипа. Фактический продукт, поставляемый могут отличаться. Технические характеристики, особенности и программного обеспечения могут быть изменены без предварительного уведомления. Для получения самой последней на сегодняшний день руководство по эксплуатации пожалуйста, посетите www.truefitness.com
.Для документов на другие языки, пожалуйста, посетите www.truefitness.com/resources/document-library/

RC900 UPRIGHT BIKE OWNERS MANUAL

A MESSAGE TO OUR CUSTOMERS

Frank Trulaske began TRUE Fitness® over thirty-five year ago with the simple philosophy of delivering superior fitness products, service, and support. Today, TRUE is the global leader in premium fitness equipment for the commercial and residential markets. Our goal is to be the leader in technology, innovation, performance, safety and style. TRUE has received many awards for its product over the years and remains the benchmark for the industry. Fitness facilities and consumers invest in TRUE products for their durable commercial platforms used in all its products, both commercial and residential alike.

The proud manufacturing tradition of quality and the culture of innovation at TRUE have given rise to a full line of extraordinary cardio and strength equipment. As a result, people all over the world are benefiting from the TRUE experience. Innovation across the full product line has made TRUE successful and is a trademark of the TRUE heritage. TRUE's patented Heart Rate Control technology is just one of the remarkable ways we deliver simple and superior performance every user can enjoy, and most importantly, use to achieve personal health and fitness goals.

At the heart of our success is the relentless and systematic life testing of both our products and their components. We have dedicated employees who understand our philosophy is to deliver the best products in the world.

Our goal is to deliver the world's best premium equipment for our customers' health and fitness solutions.

RC900 UPRIGHT BIKE OWNERS MANUAL

TABLE OF CONTENTS:

Chapter 1: Safety Instructions
Safety Instructions....5
Space Requirements....7
Grounding Instructions....8
Power Requirements....9
Warning Decals....10
Compliances....10

Chapter 2: Assembly Instructions
Pre Assembly Checklist....11
Assembly Steps....13
Wiring Diagram....26

Chapter 3: Product Overview
Product Overview....28

Chapter 4: Care & Maintenance
Care & Maintenance....30
Cleaning the Equipment....30
Lubrication....30
Other Scheduled Preventive Maintenance....31
Long Term Storage....31

Chapter 5: Customer Service
Contacting Service....32
Contacting Sales....32
Reporting Freight or Parts Damage....33

Chapter 6: Additional Information
Troubleshooting Guide....34

Chapter 7: Warranty Information
Warranty Registration....37

CHAPTER 1: SAFETY INSTRUCTIONS

IMPORTANT SAFETY INSTRUCTIONS
SAVE THESE SAFETY INSTRUCTIONS

This equipment is intended for a commercial or institutional setting. This owner's manual should be accessible to all personal trainers, faculty, and members.

⚠ WARNING: ALL EXERCISERS MUST READ ALL INSTRUCTIONS BEFORE USING THE EQUIPMENT.

⚠ WARNING: Heart rate monitoring systems may be inaccurate for some individuals. Over-exercising may result in serious injury or death. If you feel faint, stop exercising immediately.

⚠ WARNING: Equipment should be immediately taken out of use if it fails to work properly or when a warning is presented electronically.

TRUE STRONGLY recommends seeing a physician for a complete medical exam before undertaking an exercise program, particularly if the user has a family history of high blood pressure or heart disease, is over the age of 45, smokes, has high cholesterol, is obese or has not exercised regularly in the past year. Additionally, TRUE recommends consulting a fitness professional on the correct use of this product. If at any time while exercising the user experiences faintness, dizziness, pain or shortness of breath, he or she must stop immediately.

⚠ WARNING: To reduce the risk of electrical shock, always unplug this TRUE product before cleaning or attempting any maintenance activity. Do not handle the plug with wet hands.

⚠ WARNING: To reduce the risk of burns, fire, electric shock, or injury, it is imperative to connect each product to a properly grounded 110V electrical outlet. A risk of electrical shock may result from improper connection of the equipment's grounding conductor. Check with a qualified electrician if you are unsure about proper ground techniques. Do not modify the plug provided wiht this product. If it will not fit an electrical outlet, have a proper outlet installed by a qualified electrician. Your TRUE Fitness product must be properly grounded to reduce risk of shock if the equipment malfunctions. Your equipment is equipped with an electrical cord, which includes an equipment grounding conductor and a grounding plug. The plug must be inserted into an outlet that has been properly installed and grounded in accordance with all local codes and ordinances. A temporary adapter cannot be used to connect this plug to a two-pole receptacle in North America. If a properly grounded 15 amp outlet is not available, a qualified electrician must install one.

⚠ WARNING: Do not move the equipment by lifting the console. Do not use the console as a handlebar during a workout.

⚠ WARNING: This product contains chemicals known to the state of California to cause cancer and birth defects or other reproductive harm.

⚠ WARNING: Keep equipment stable on flat ground.

CHAPTER 1: SAFETY INSTRUCTIONS

WARNING: Replace warning labels that may be worn, damaged, or missing.

WARNING: Replace any non-working or damaged components, remove the unit from service until repair is performed.

WARNING: To reduce the risk of burns, fire, and electric shock or injury to persons, follow these instructions:

- This appliance should never be left unattended when plugged in.
- Do not use any type of extension cord with this product.
- Unplug it from the outlet when not in use and before any servicing.
- Do not operate the equipment while being covered with a blanket, plastic, or anything that insulates or stops airflow.

WARNING: Risk of personal injury-crushing hazard when equipment is in operation - Keep feet, hands, and fingers away from moving parts.

CAUTION:

- Do not use typing or web surfing features at excessive speeds. Always stabilize yourself by holding a stationary handle when using typing or web surfing features (Varies by console option).
- Health related injuries may result from incorrect or excessive use of exercise equipment.
- Do not use the contact heart rate grips as a handlebar during a workout.
- Any changes or modifications to this equipment could void the product warranty.
- To disconnect plug remove from electrical outlet.
- The RC900 bike is self-generated and does not require the use of an electrical outlet with the LED console. Optional TFT or touch screen consoles require 110V AC input and 9V DC, 1.5Amp output for console operation only.
- Use a TRUE AC power cord or AC/DC adapter only
- Note the plug configuration for the power adapter may vary by country.
- The batteries within self-generated equipment contain materials that are considered hazardous to the environment. Federal law requires proper disposal of these batteries.
- Position this product so the power cord plug is accessible to the user.
- Keep the power cord away from heated surfaces. Do not pull the equipment by the power cord or use the cord as a handle. Do not run the power cord along the side or under the bike.
- If the bike power supply cord is damaged it must be replaced by the manufacturer, an authorized service agent, or a similarly qualified person to avoid a hazard.
- Do not use this product in areas where aerosol spray products are being used or where oxygen is being administered. Such substances create the danger of combustion and explosion.
- Always follow the console instructions for proper operation. Close supervision is necessary when used near children under the age of 15, or disabled persons.
- Do not use this product outdoors, near water, while wet, or in areas if high humidity including extreme temperature changes.
- Never operate a TRUE product with the air openings blocked. Keep air openings free of lint, hair or any obstructing material.
- Never insert objects into any openings in this product. If an object should drop inside, turn off the power, unplug the power cord from the outlet and carefully retrieve it. If the item cannot be reached, contact TRUE Customer Service.
- Never place liquids of any type directly on the unit except in the accessory tray or bottle holders. Containers with lids are recommended.
- Wear shoes with rubber or high traction soles. Do not use shoes with heels, leather soles, cleats or spikes. Make sure no stones are embedded in the soles. Do not use this product in bare feet. Keep all loose clothing, shoelaces and towels away from moving parts.
- Do not reach into or underneath the unit, or tip it on its side during operation.

CHAPTER 1: SAFETY INSTRUCTIONS

⚠ CAUTION:

- Use correct ergonomic positioning while operating the bike.
- Do not allow animals on or near the equipment while in operation.
- Do not exceed maximum user weight of 400 lbs (181 kg).
- Avoid exiting bike while the pedals are still in motion.
- Do use if you have a cold or fever.
- When using this exercise machine, basic precautions should always be followed.
- Use this bike only for its intended use as described in this manual.
- Do not use attachments not recommended by the manufacturer.
- Allow only trained personnel to service this equipment.
- Avoid the possibility of bystanders being struck or caught between moving parts by making sure that they are out of reach of the bike while it is in motion.
- Allow only one person at a time on the bike while it's operating.
- It is the sole responsibility of the owner/operator to ensure regular and scheduled maintenance is performed.
- This appliance can be used by children aged from 8 years and above and persons with reduced physical, sensory or mental capabilities or lack of experience and knowledge if they have been given supervision or instruction concerning use of the appliance in a safe way and understand the hazards involved.
- Children shall not play with the appliance.
- Cleaning and user maintenance shall not be made by children without supervision.

SPACE REQUIREMENTS:

TRUE's recommendation is to leave a 39" safety zone at rear of bike. The sides of the bike should be at least 20" away from the wall or obstructions. (See Fig. 1)

Fig 1

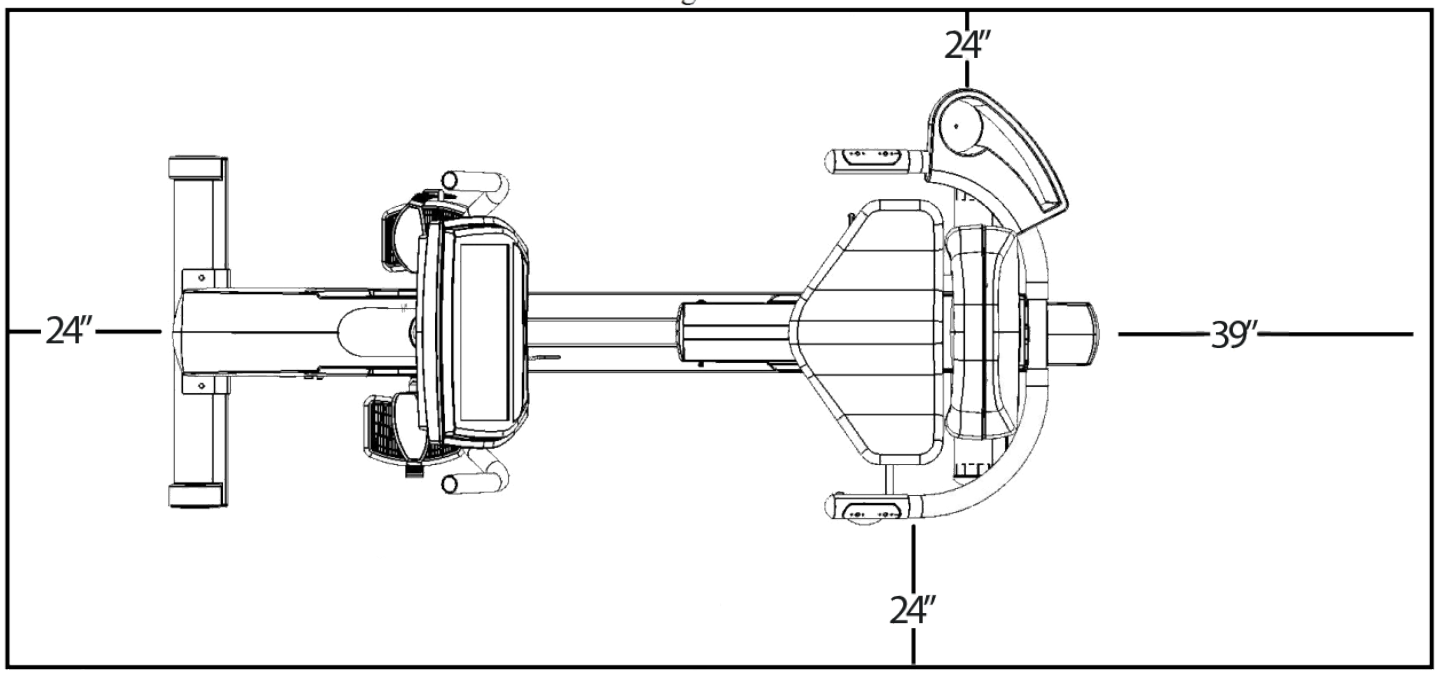

GROUNDING INSTRUCTIONS:

This product must be grounded, if it should malfunction or breakdown, grounding provides a path of least resistance for electric current to reduce the risk of electric shock. This product is equipped with a cord having an equipment-grounding conductor and a grounding plug. The plug must be plugged into an appropriate outlet that is properly installed and grounded in accordance with all local codes and ordinances.

DANGER:

- Improper connection of the equipment-grounding conductor can result in a risk of electric shock.
- Check with a qualified electrician or serviceman if you are in doubt as to whether the product is properly grounded. Do not modify the plug provided with the product. If it will not fit the outlet, have a proper outlet installed by a qualified electrician.
- Do not remove the motor cover or you may risk injury due to electric shock.
- 120-Volt: This model is for use on a nominal 120-V circuit and has a grounding plug that looks like the plug illustrated in figure A. Make sure the product is connected to an outlet having the same configuration as the plug. No adaptor should be used with this product.
- 230-Volt: This model is for use on a circuit having a nominal rating more than 120-V and is factory-equipped with a specific electric cord and has a grounding plug that looks like the plug illustrated in figure B. Make sure that the product is connected to an outlet having the same configuration as the plug in Figure B. No adapter should be used with this product. If the product must be reconnected for use on a different type of electric circuit, the reconnection should be made by qualified service personnel.

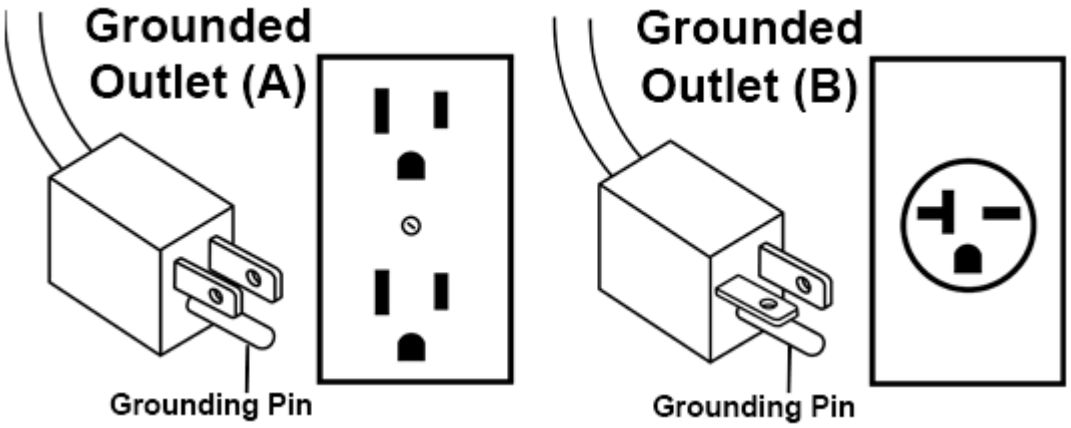

POWER REQUIREMENTS FOR **TRUE** PRODUCTS

NOTE: *Read and understand all instructions on this sheet and in the Owner's manual before plugging any TRUE power cord into an electrical outlet. This information sheet will help you identify the voltage and cords you need where you live and will outline requirements for:*

- Grounded, dedicated lines
- Voltage
- Power cords
- Power adapters
- Extension cords

!DANGER: ***Improper connection of the equipment-grounding conductor can result in risk of electric shock. Check with a qualified electrician or service provider if you are in doubt as to whether the equipment is properly grounded or installed on a dedicated line. Seek a qualified electrician to perform any modifications to the cord or plug. TRUE is not responsible for injuries or damages as a result of cord or plug modification.***

!CAUTION: ***Place cords away from heat (such as baseboards). Use care to arrange any cord so it doesn't become an obstacle.***

Extension Cords

Do not use an extension cord to supply power to any TRUE product.

Grounded, Dedicated Line

TRUE equipment must be grounded. If it should malfunction or break down, grounding provides a path of least resistance for electric current to reduce the risk of electric shock. TRUE cords (except for cycle adapters) have an equipment-grounding conductor and a grounding plug. The plug must be plugged into an appropriate outlet that is properly installed and grounded in accordance with all local codes and ordinances where you live. Do not use a ground plug adapter to adapt the power cord to a non-grounded outlet. Do not use a GFCI outlet or GFCI circuit breaker. A dedicated line will assure that adequate power is available for safe operation over the life of your TRUE Product.

Voltage

Voltage required for your unit is located on the serial number decal (usually on the front of the unit). Depending on where you live voltage requirements differ.

For example, in the United States some TRUE treadmills require a circuit rated 115 VAC, 60 Hz and 20 amps. See Figure 1. However, a home typically has 15 amp outlets. In this case, contact an electrician to install a 20 amp dedicated line prior to use. See Figure 2.

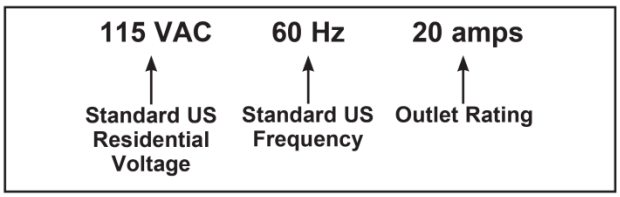

Figure 1

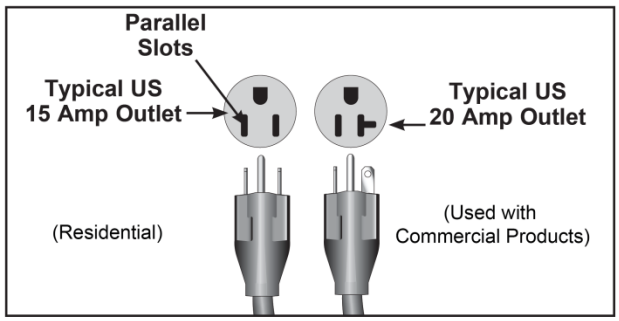

Figure 2

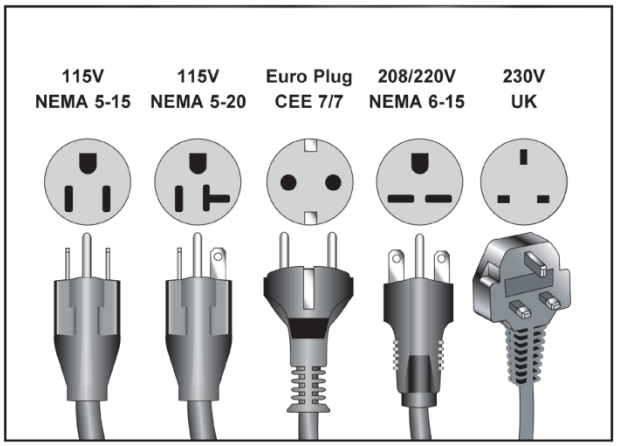

Figure 3

WARNING DECALS:

⚠ WARNING: Replace warning labels that may be worn, damaged, or missing.

To replace any worn or missing decals contact TRUE FITNESS by visiting www.truefitness.com or contact customer service at 800-883-8783.

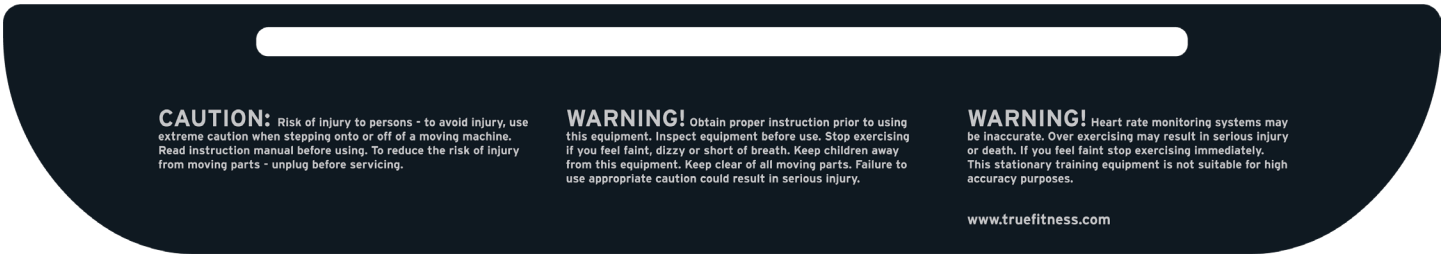

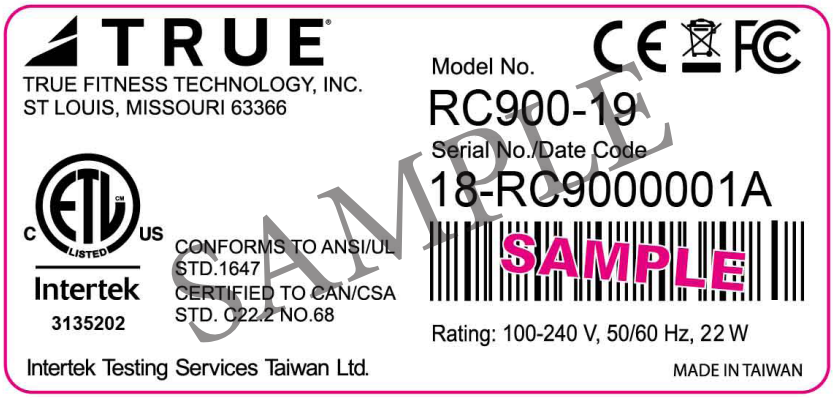

COMPLIANCES:

This equipment complies with all applicable codes and regulations. For a complete list of compliances, please visit www.truefitness.com.

CHAPTER 2: ASSEMBLY GUIDE
IMPORTANT SAFETY INSTRUCTIONS

- **Read and understand all instructions and warnings prior to use.**
- Obtain a medical exam before beginning any exercise program. If at any time during exercise youfeel faint, dizzy, or experience pain, stop and consult your physician.
- Obtain proper instruction prior to use.
- This unit is intended for commercial use only.
- Inspect the unit for incorrect, worn, or loose components and do not use until corrected, replaced,or tightened prior to use.
- Do not wear loose or dangling clothing while using the unit.
- Care should be used when mounting or dismounting the unit.
- Read, understand, and test the emergency stop procedures before use.
- Disconnect all power before servicing the unit.
- Do not exceed maximum user weight of 400 lbs.
- Keep the top side of the moving surface clean and dry.
- Keep children and animals away.
- Use caution when moving and assembling unit.
- All exercise equipment is potentially hazardous. If attention is not paid to the conditions ofequipment usage, death, or serious injury could occur.
- Save these instructions.

*Should you need technical assistance in assembly of your TRUE Fitness product, contact TRUE Fitness Technical Support at 1-800-883-8783.

PRE-ASSEMBLY CHECKLIST:

Provided Tools:

5mm Hex Wrench	6mm Hex Wrench
Used during steps 4 & 5	Used during steps 4 & 11
8mm Hex Wrench	**15mm Pedal Wrench**
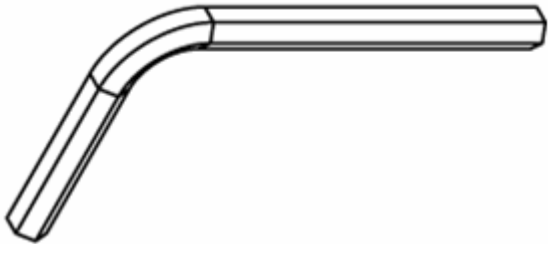 Used during steps 1 & 2	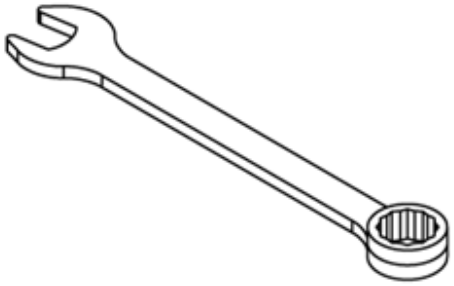 Used during step 8

CHAPTER 2: ASSEMBLY GUIDE

PRE-ASSEMBLY CHECKLIST:

Provided Hardware:

STEP 1 & 2 (FRONT & REAR STABILIZER BARS)

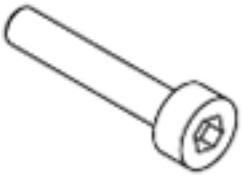

Hex Screw, M10 x L55
(X1) Qty. 4

Lock Washer, M10
(S1) Qty. 4

Flat Washer, M10
(F1) Qty. 4

STEP 4 (SEAT HANDLEBAR)

Counter-Bore Hex screw,
M8 x L20

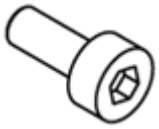

Hex Screw, M8 x L20
(X4) Qty. 2

Lock Washer, M8
(S4) Qty. 2

Flat Washer, M8
(F4) Qty. 2

STEP 5 (SEAT BACK FRAME PIVOT ASSEMBLY)

Hex Screw, M6 x L15
(X5) Qty. 8

Lock Washer, M8
(S5) Qty. 8

Flat Washer, M8
(F5) Qty. 8

STEP 6 (REAR SEAT PIVOT COVER)

Phillips Head Screw,
M5 x L15
(X6) Qty. 2

Flat Washer, M5
(F6) Qty. 2

STEP 7 (SEAT BACK FRAME COVER)

Phillips Head Screw,
M5 x L20
(X7) Qty. 4

STEP 15 (CONSOLE COVERS)

Phillips Head Screw,
M4 x L10
(X15) Qty. 4

STEP 11 (FRONT MAST)

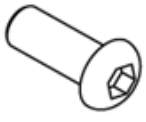

Hex Screw,
M10 x L16
(X11) Qty. 5

Split Washer, M10
(S11) Qty. 5

Flat Washer, M10
(F11) Qty. 5

CHAPTER 2: ASSEMBLY GUIDE

ASSEMBLY STEPS:

⚠ CAUTION:

- Use caution when assembling bike. It is recommended that at least two people unpack and assemble bike.
- Remove all bike components from packaging.
- For each step use hardware in the corresponding bag.

Sub-Assembly Identification:

- Use the image below as a reference for where the provided sub-assemblies will be located in the complete bike assembly.

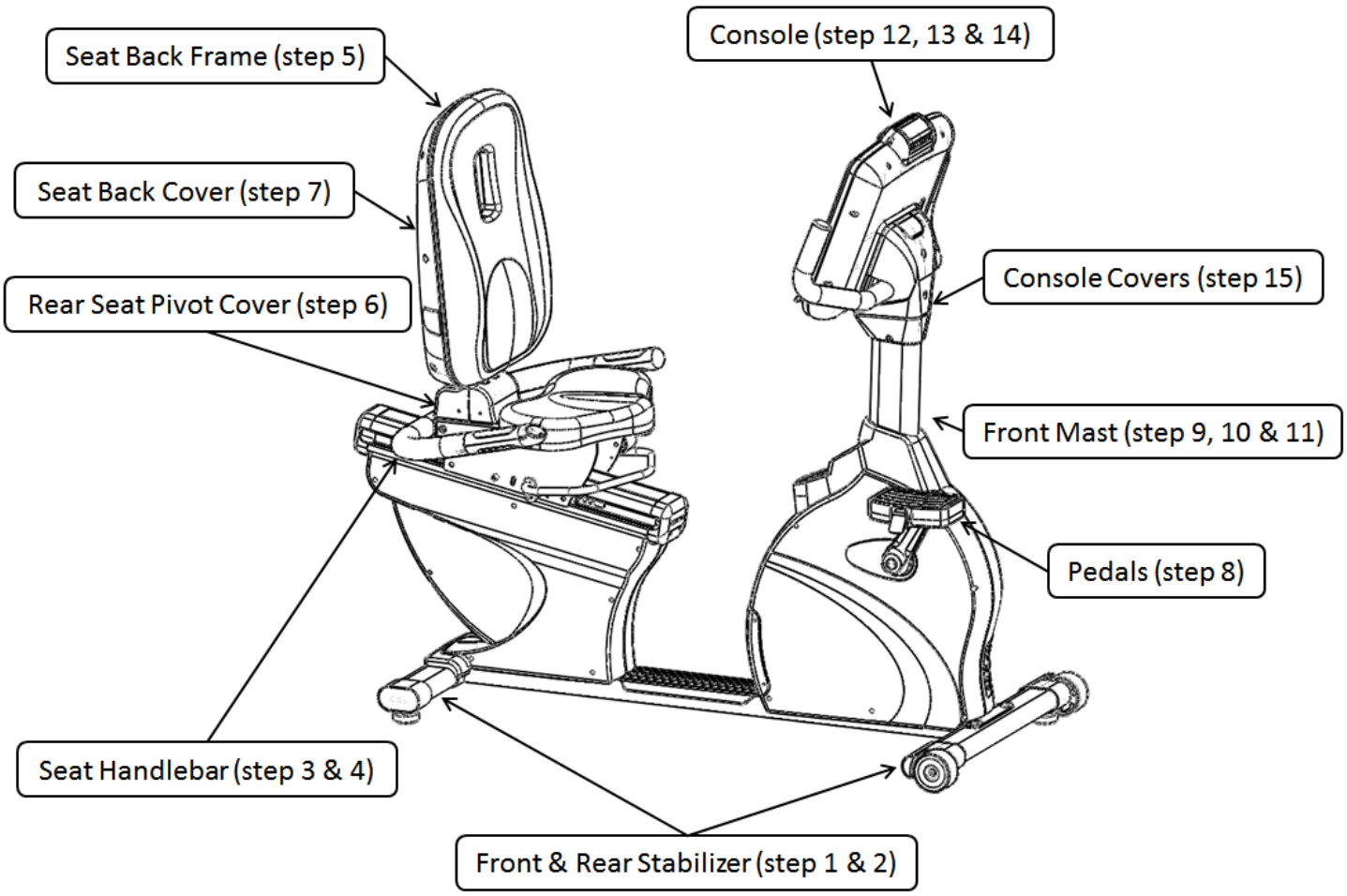

CHAPTER 2: ASSEMBLY GUIDE

ASSEMBLY STEPS:

⚠ CAUTION:

- It is recommended that at least 2 people are used to assemble the bike.
- To protect the floor from damage, rest the bike frame on a large piece of cardboard packaging.

Step 1 Front Stabilizer Bar:

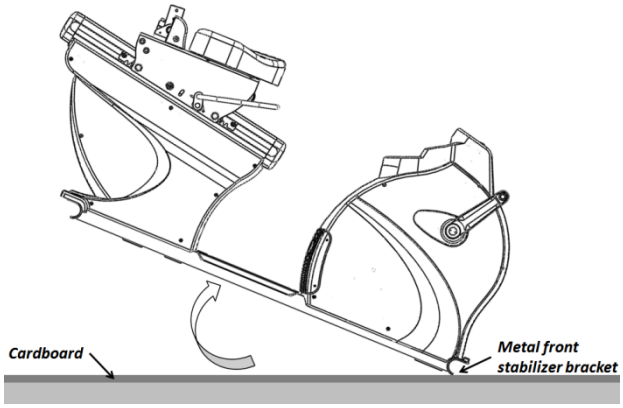

- Rotate the frame forward on the Front Stabilizer bracket (metal).
- At least one person should hold the frame, while another person completes the remaining rear stabilizer installation steps.

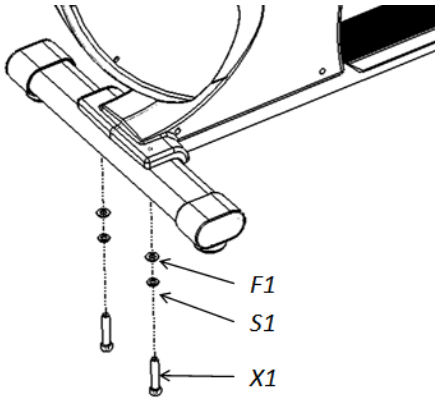

- For each screw, install through split washer then flat washer.
- Insert Rear Stabilizer into the metal bracket.
- Install each screw through the bottom of the metal bracket, then through the Rear Stabilizer.
- Tighten using the provided 8mm hex wrench.

Step 2 Rear Stabilizer Bar:

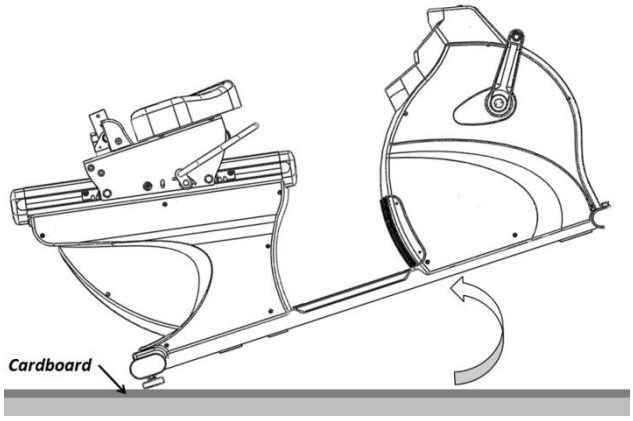

- Rotate the frame backwards on the Rear Stabilizer.
- At least one person should hold the frame, while another person completes the remaining Front Stabilizer installation steps.

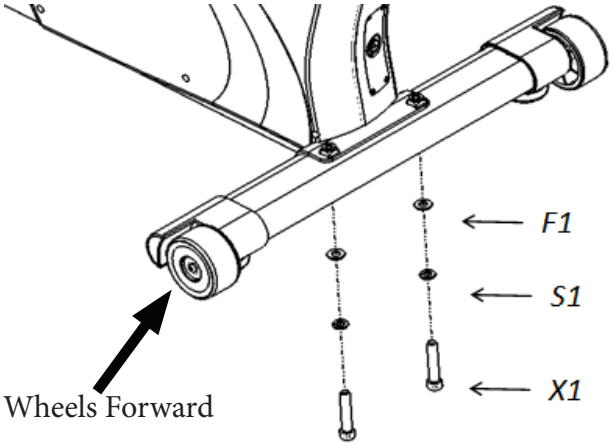

- For each screw, install through split washer then flat washer.
- Insert Front Stabilizer into the metal bracket; wheels forward (as shown, above).
- Install each screw through the bottom of the metal bracket, then through the Front Stabilizer.
- Tighten using the provided 8mm hex wrench.

ASSEMBLY STEPS:

Step 3 Seat Back Frame Assembly:

* If Installing Optional Armrest Handlebar, refer to Armrest Handlebar Assembly Guide for Steps # 4 – 7.

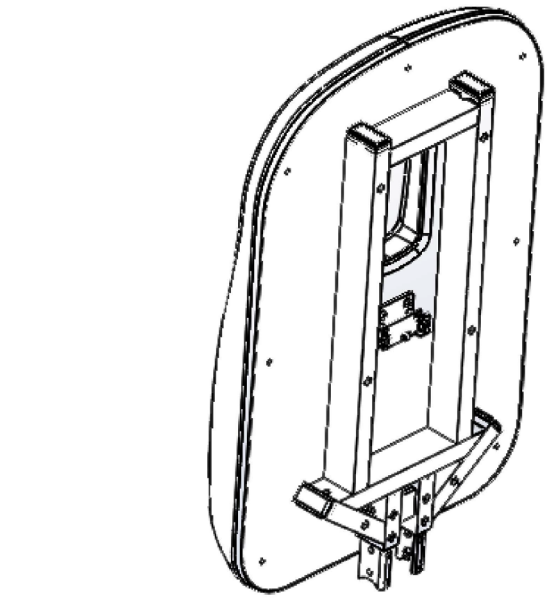

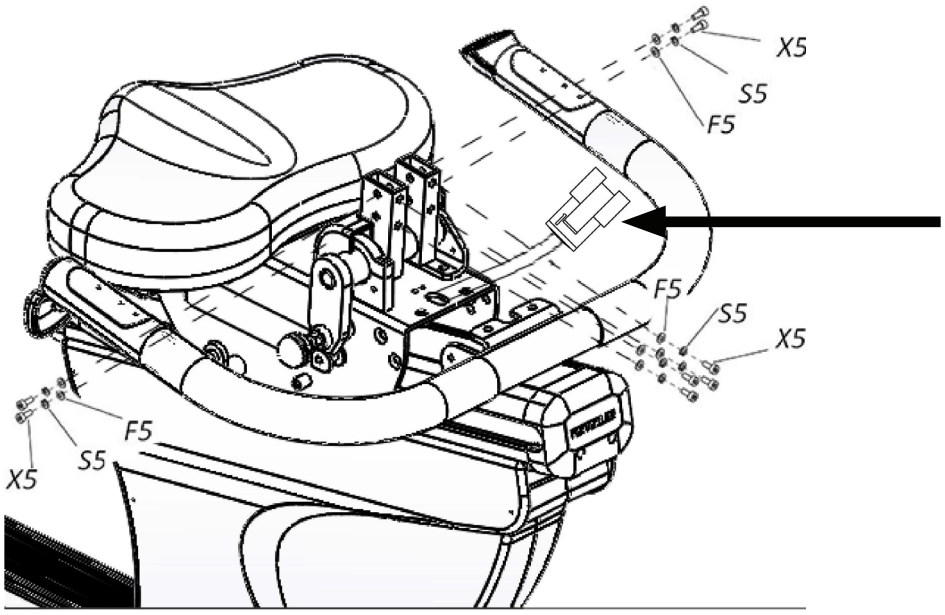

- Install the Seat Back Frame into the Seat Carriage.
- For each hex screw (X5, quantity 8), install through quantity 1 split washer (S5), followed by quantity 1 flat washer (F5).
- Secure the Seat Back Frame to the Seat Carriage by tightening all 8 screws with the provided 5mm hex wrench.
- Verify that the Seat Back Frame is secured tightly to the Seat Carriage; tighten screws if necessary.
- Connect the Seat Back Frame cable to the cable coming out of the Seat Carriage top hole (See arrow above denoting Seat Back Frame cable.)

ASSEMBLY STEPS:

Step 4 Seat Handlebar Cable Connections:

* If Installing Optional Armrest Handlebar, refer to Armrest Handlebar Assembly Guide for Steps # 4 – 7.

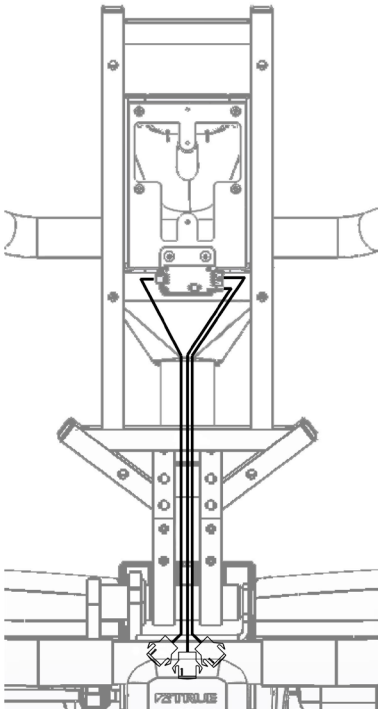

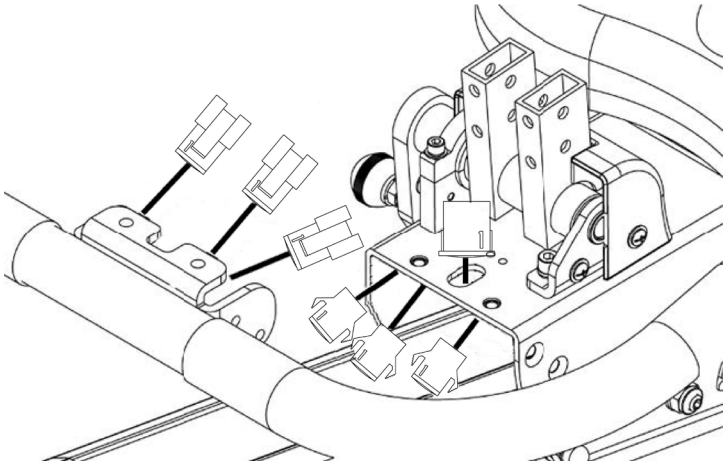

- At least one person should hold the Handlebar while another completes the remaining cable connection steps
- Prior to connection, verify the Handlebar is in the correct orientation; graphics on the contact heart rate thumb switches should be facing up
- Connect the Handlebar cables, as shown by the connection lines in the provided diagrams (above, left)

Step 5 Seat Handlebar Assembly:

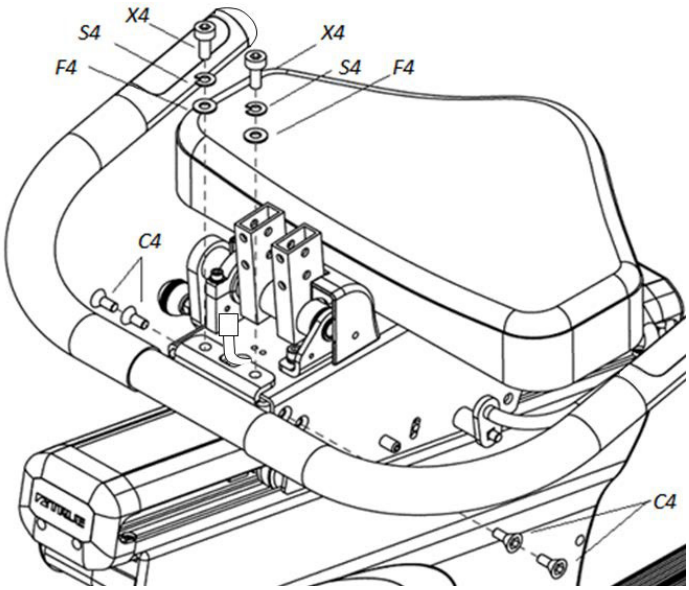

- Install the Seat Handlebar Bracket into the Seat Carriage; the Handlebar Top Bracket should sit on Seat Carriage (as shown in diagram, left)
- For each counter-bore hex screw (C4, quantity 4), start each screw through the Seat Carriage and Handlebar Bracket, using the provided 5mm hex wrench
- For each hex screw (X4, quantity 2), install through quantity 1 split washer (S4), followed by quantity 1 flat washer (F4)
- Start each hex screw through the Handlebar Bracket and Seat Carriage, using the provided 5mm and 6mm hex wrench
- Tightening 4 screws (C4) with 5mm hex wrench and the other 2 screws (X4) with 6mm hex wrench provided

ASSEMBLY STEPS:

Step 6 Rear Seat Pivot Cover Assembly:

If installing optional armrest handlebar, refer to armrest handlebar assembly guide for steps # 4-7.

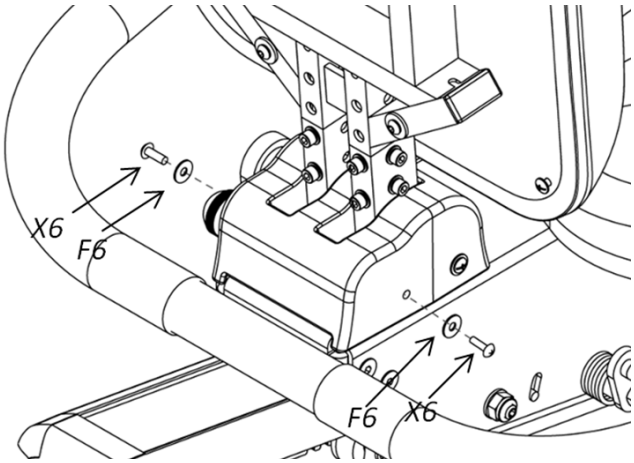

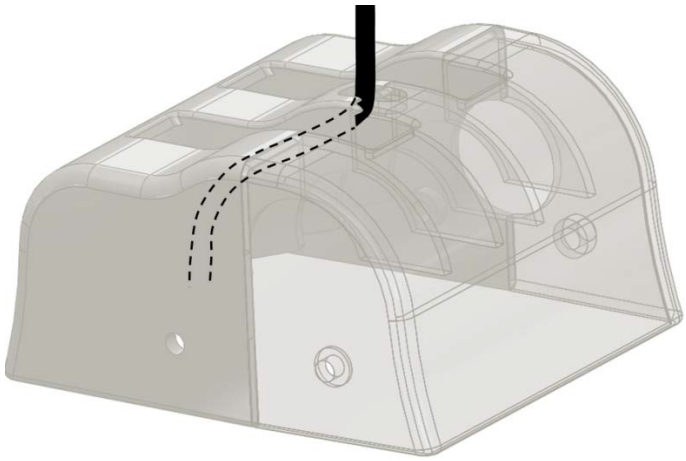

- Install the Rear Seat Pivot Cover onto the Seat Carriage.
- Rear Seat Pivot Cover should mate cleanly with the Front Seat Pivot Cover (as shown, above).
- Seat Back Frame Cable should be positioned in the center of the Rear Seat Pivot Cover (as shown, above).
- For each Phillips head screw (X6, quantity 2), install through quantity 1 flat washer (F6).
- Secure the rear seat pivot cover to the seat carriage by tightening both screws with a Phillips head screwdriver (not provided).

Step 7 Seat Back Frame Cover Assembly:

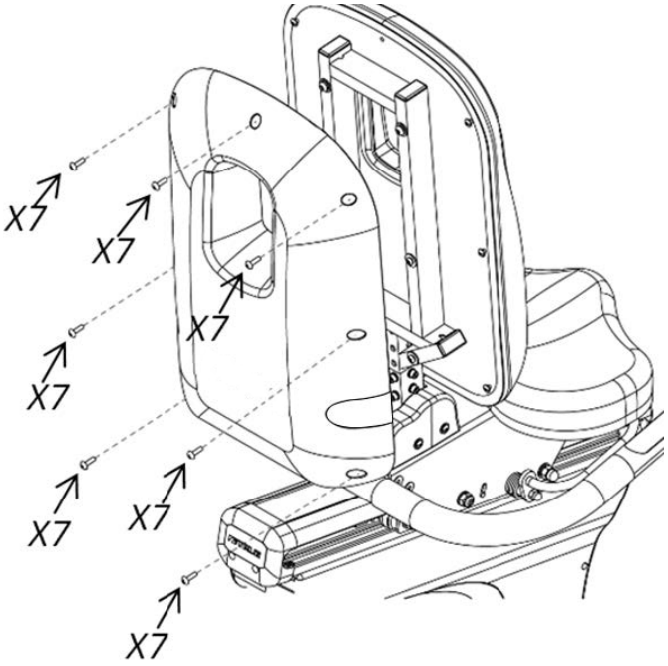

- Align the Seat Back Cover thru holes (quantity 7) with the Seat Back Frame threaded holes (quantity 7)
- Secure the Seat Back Cover to the Seat Back Frame by tightening all 7 screws (X7) with a Philips head screwdriver (not provided)

ASSEMBLY STEPS:

Step 8 Pedal Assembly:

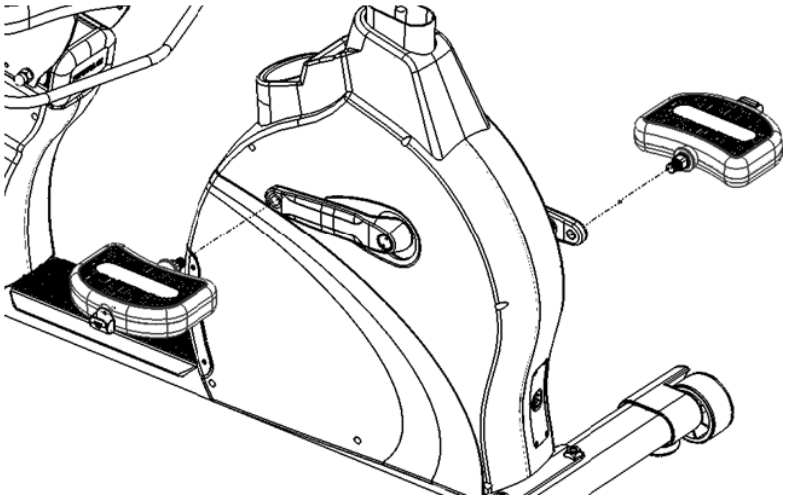

- Align the Left Pedal with the Left Crank, and the Right Pedal with the Right Crank; Pedals should be clearly labeled on the Pedal Strap.
- Secure each Pedal to the appropriate Crank using the provided pedal wrench.

NOTE: The Left Pedal is reverse-threaded (turn counter-clockwise to tighten).

Step 9 Preparing Front Mast:

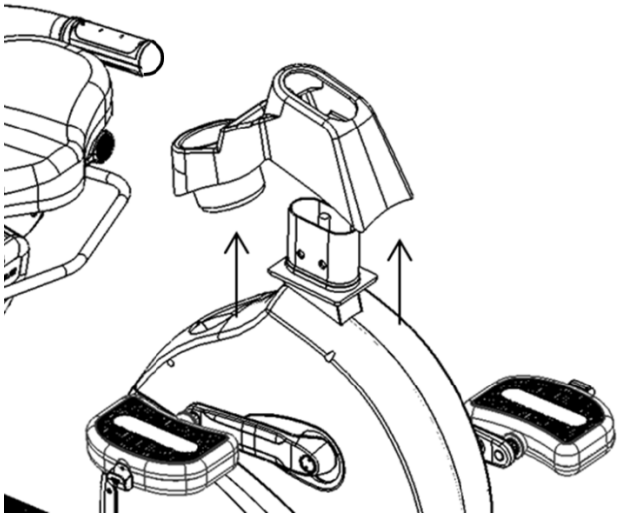

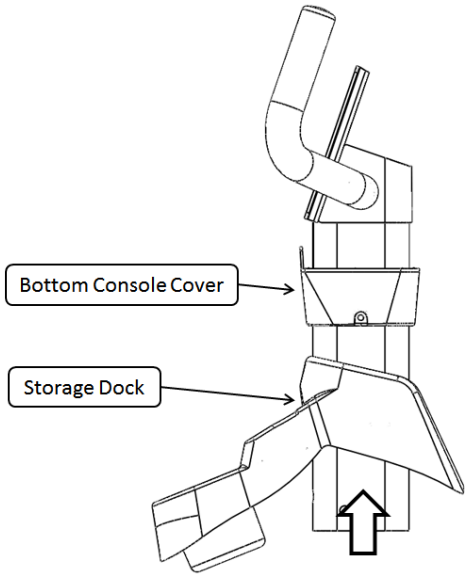

- Remove the Storage Dock from the bike frame by pulling the Storage Dock vertically away from the frame (as shown in diagram above)
- Insert Bottom Console Cover onto the Front Mast Tube (as shown, above)
- Insert Storage Dock onto the Front Mast Tube (as shown, above)
- Verify that the bottom console cover and storage dock are in the correct orientation; the storage dock compartments and front mast handlebars should be facing the same direction.

ASSEMBLY STEPS:

Step 10 Front Mast Cable Routing:

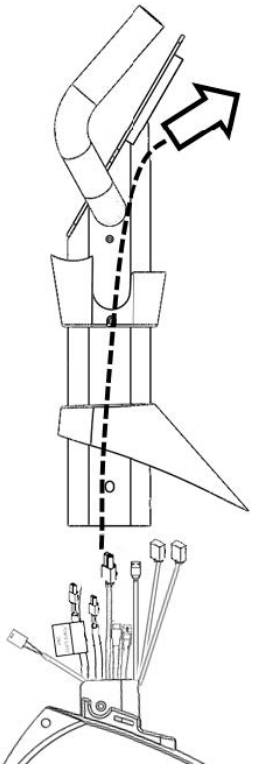

- At least 1 person should hold the Front Mast while an additional person(s) routes the Front Mast Cables.
- Route the bundle of cables through the Front Mast, as shown in the provided images (left, above).
- A Pull-tie has been provided (attached to the Front Mast tube) in order to help facilitate this routing.

Step 11 Front Mast Assembly:

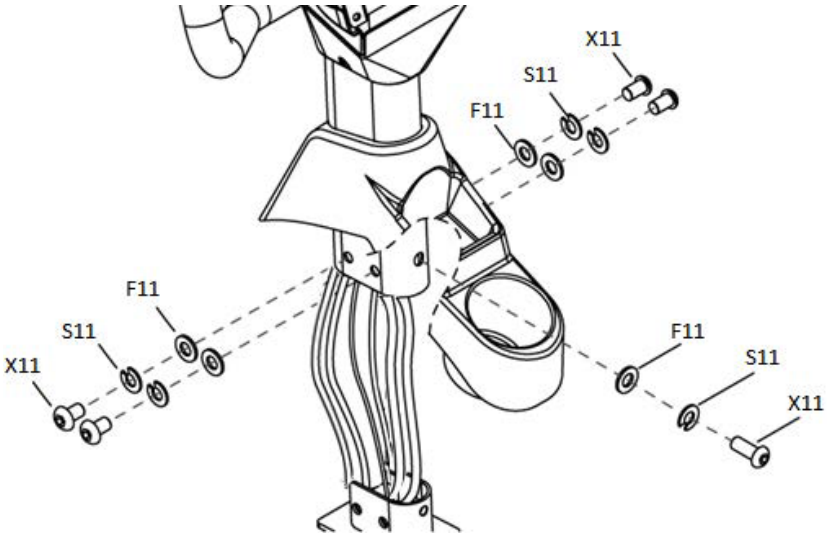

- Install the front mast onto the bike frame; the short bracket on the bike frame should fit inside the front mast tube.
- Verify that the front mast is in the correct orientation; the storage dock compartments and front mast handlebars should be facing the seat assembly.
- For each hex screw (X11, quantity 5), install through quantity 1 split washer (S11), followed by quantity 1 flat washer (F11).
- Secure the front mast to the bike frame by tightening all 5 screws with the provided 6 mm hex wrench.
- Verify that the front mast is secured tightly to the bike frame; tighten screws if necessary.
- Pull the storage dock down vertically so it covers the bottom of the front mast tube; the storage dock cup holder should fit inside a mating hole on the plastic front shrouds.

ASSEMBLY STEPS:

Step 12 Console Assembly:

Place the two bottom console mounting screws inside the bottom keyholes on the console mast assembly. Partially thread the two top console mounting screws into the console. Fully tighten all four console mounting screws.

Note: Ensure all cable connections are routed inside the console mast assembly to prevent cable pinching.

Note: Refer to the respective console manual included with your console for wiring connections.

Hardware Required:

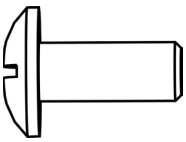

Part Number 00567800
Qty 4: M5 x 12 bolts

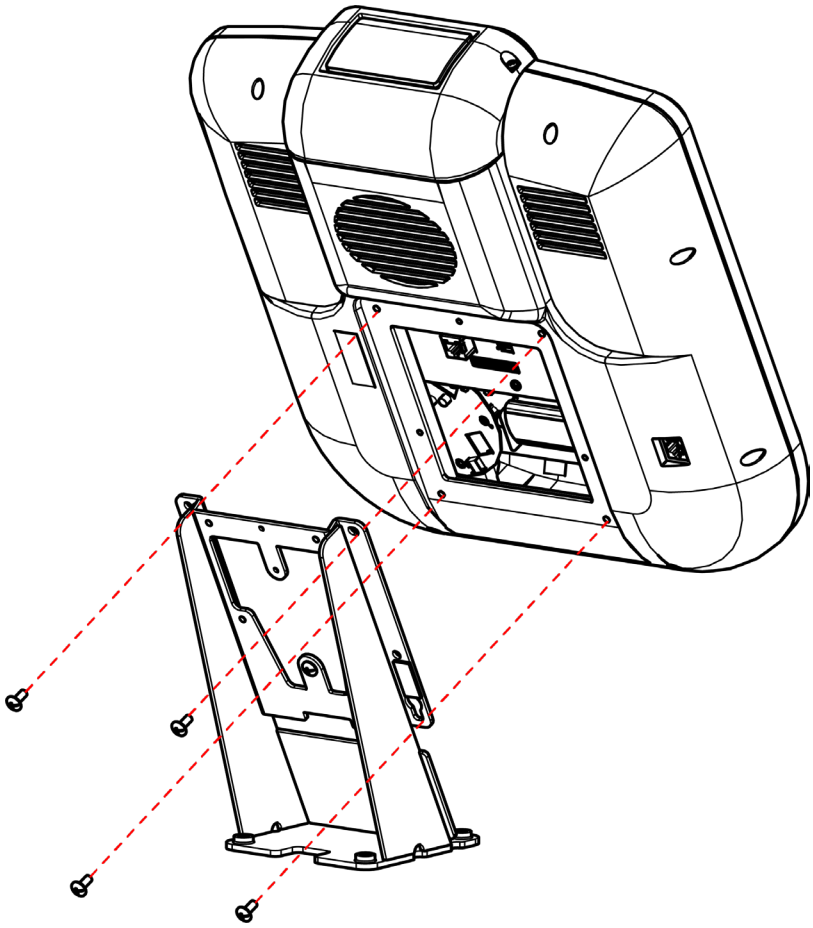

Step 13 Grounding Wire Connection:

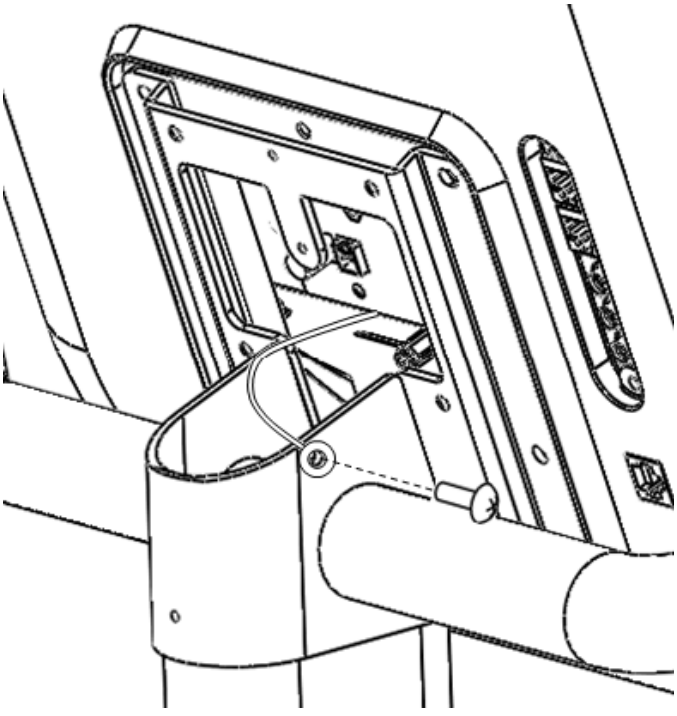

- Locate the ground screw; pre-installed into the front mast.
- Remove the ground screw with a phillips head screwdriver (not provided).
- Insert the shaft of the ground screw through the metal ring attached to the green console ground wire.
- Re-attach the ground screw to the front mast.
- Verify that the metal ground ring is compressed between the head of the ground screw and the front mast.

ASSEMBLY STEPS:

Step 14 Console Covers:

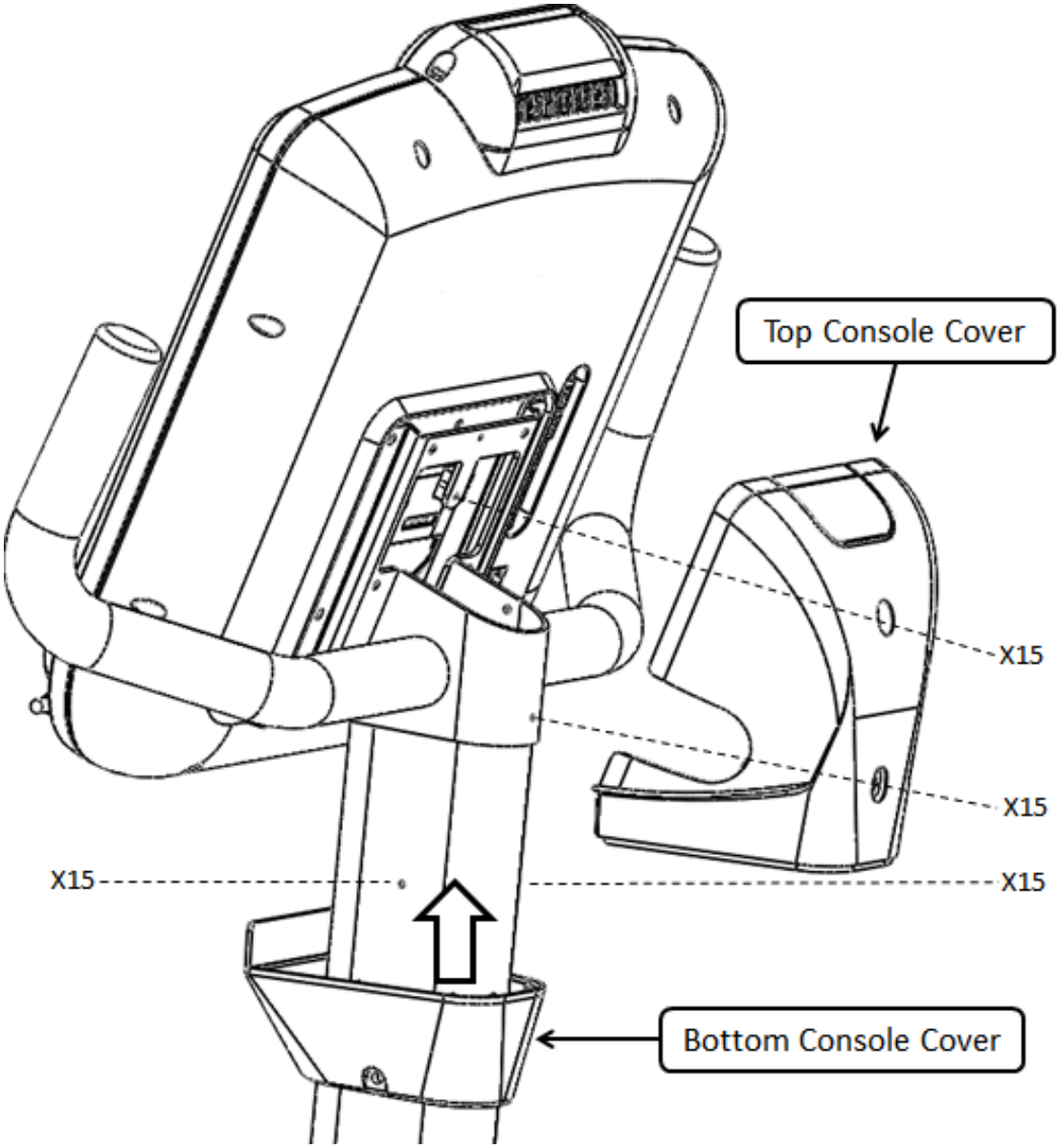

- For all hardware, tighten using a Phillips head screwdriver (not provided)
- Attach the Top Console Cover to the Front Mast using two Phillips head screws (X15)
- Slide the Bottom Console Cover up the Front Mast Tube until it mates with the Top Console Cover
- Attach the Bottom Console Cover to the Front Mast using two Phillips head screws (X15)

ASSEMBLY STEPS:

Power Supply Installation:

*Power supply installation is only required with a touchscreen console or 15" TFT console.

Step A Remove Rear Shrouds:

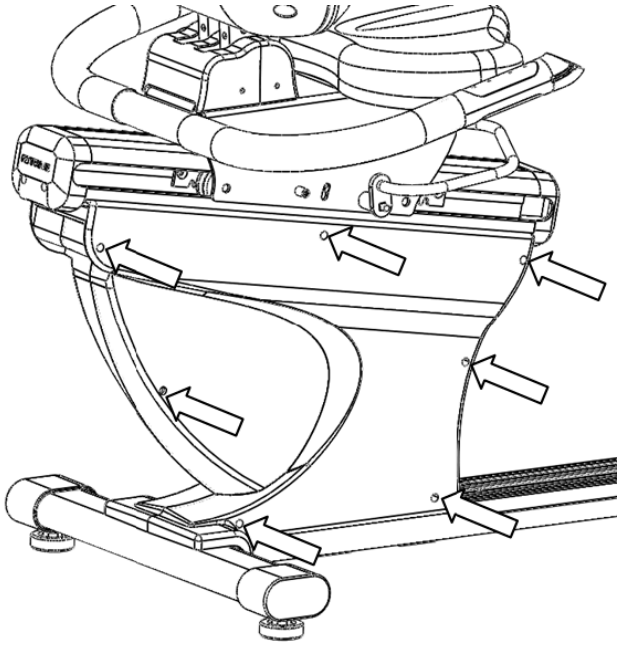

- Unscrew quantity 7 screws from the Rear Right Shroud, using a Phillips head screwdriver (not provided).
- Left and Right Rear Shrouds will now separate.
- Remove the Left and Right Rear Shrouds from the Frame, to expose the internal Power Supply mounting location.

Step B Mount and Ziptie Power Supply:

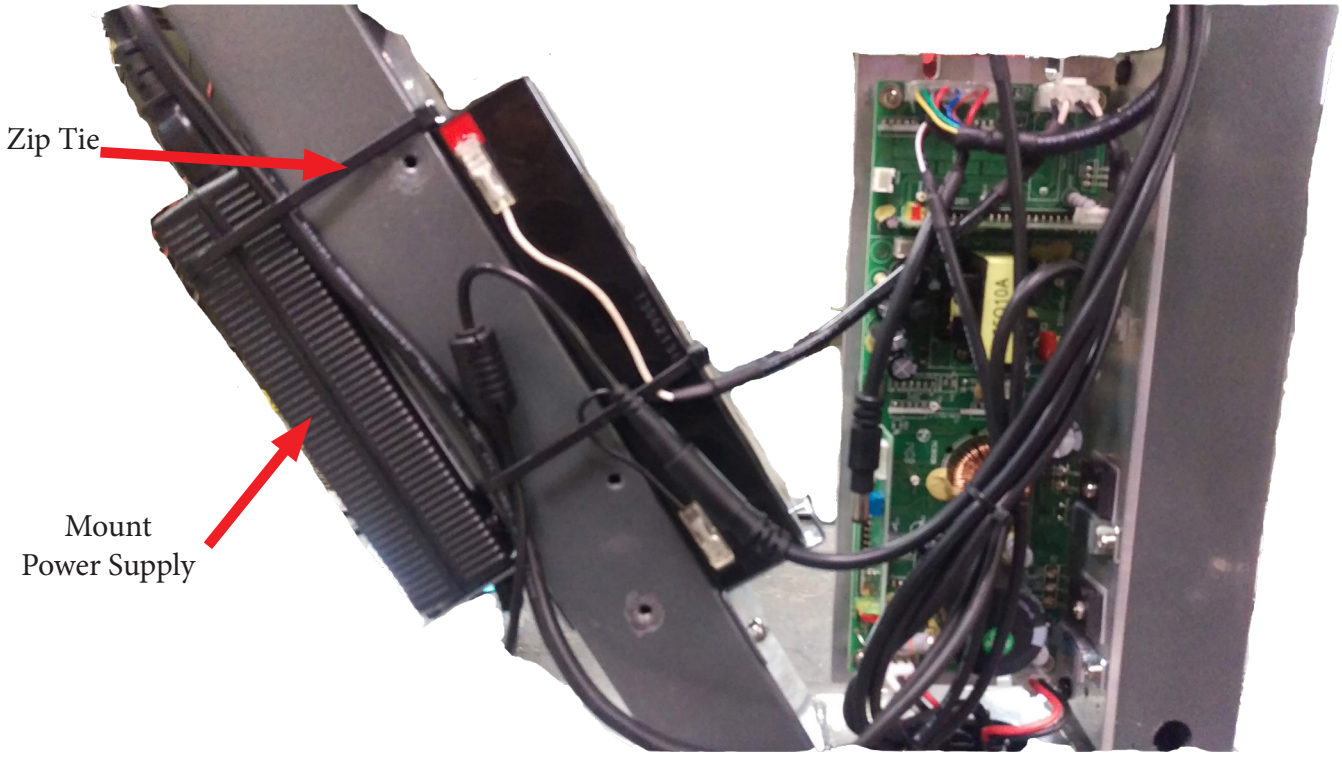

ASSEMBLY STEPS:

Step C Disconnect Lower Board Power Cable:

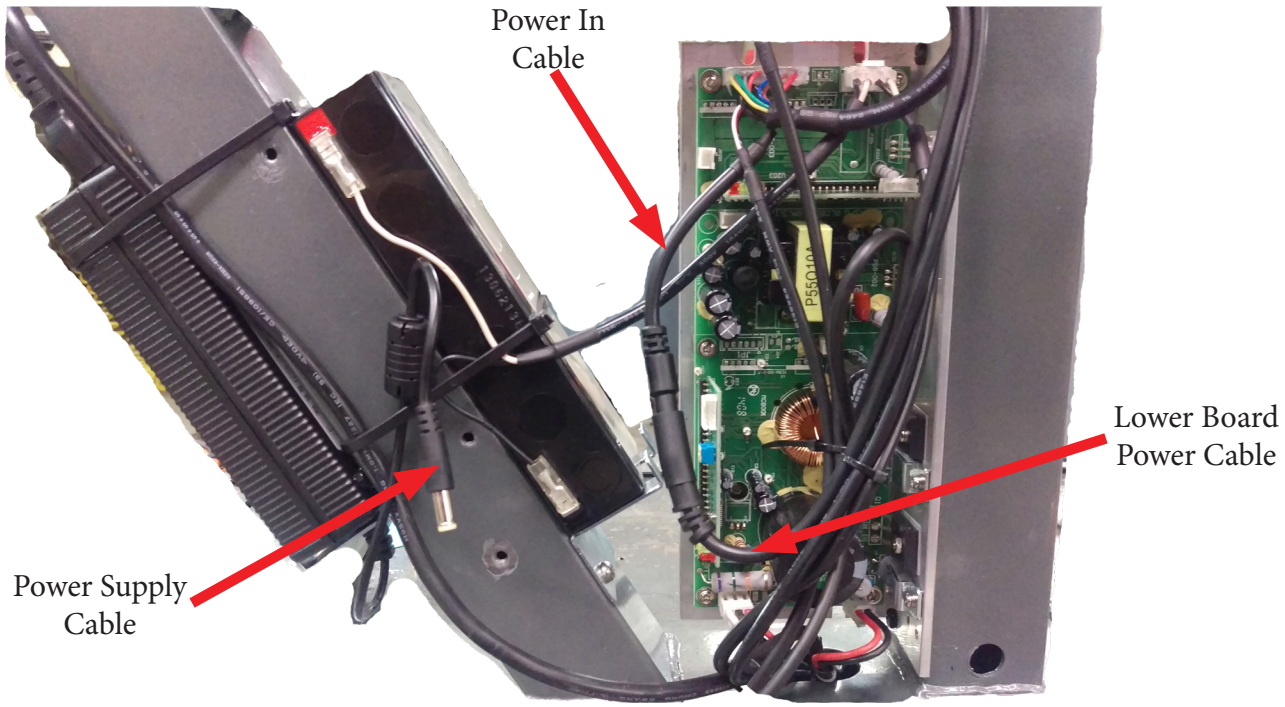

Step D Connect Power Supply:

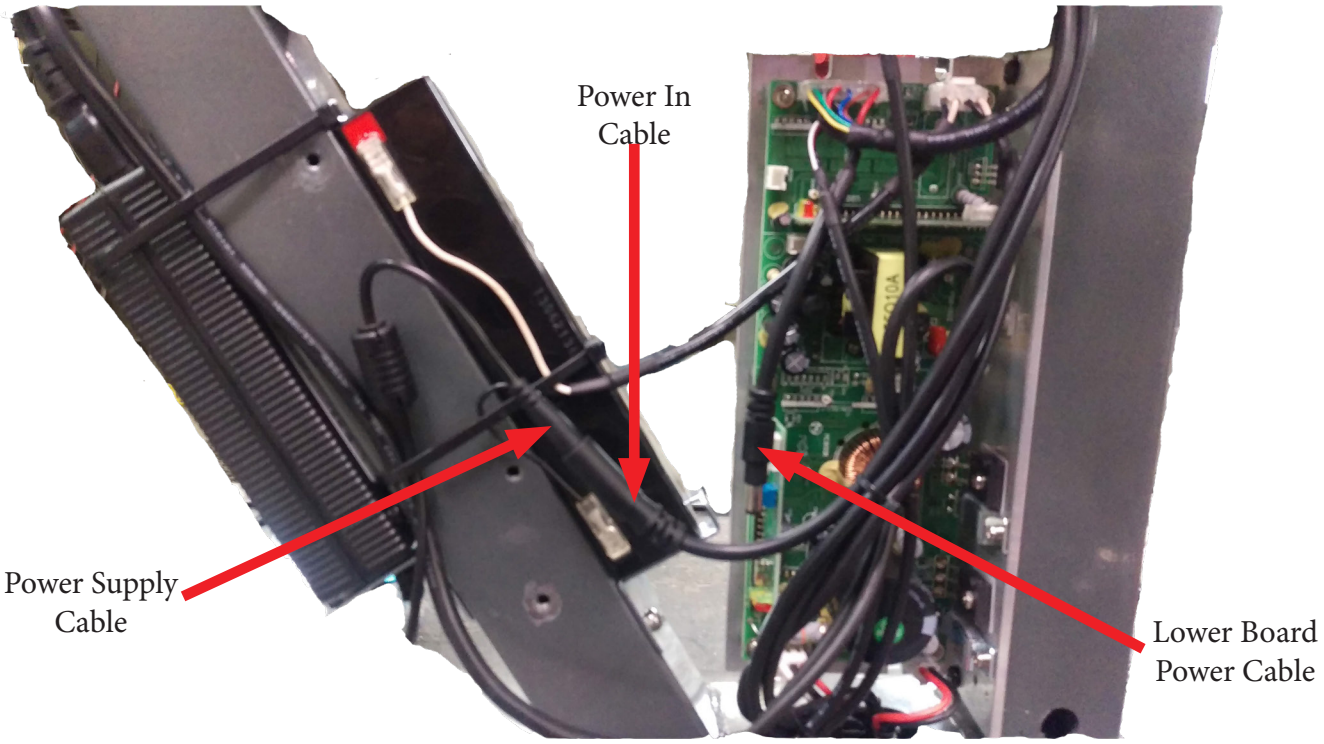

ASSEMBLY STEPS:

Step E Re-Install Rear Shroud:

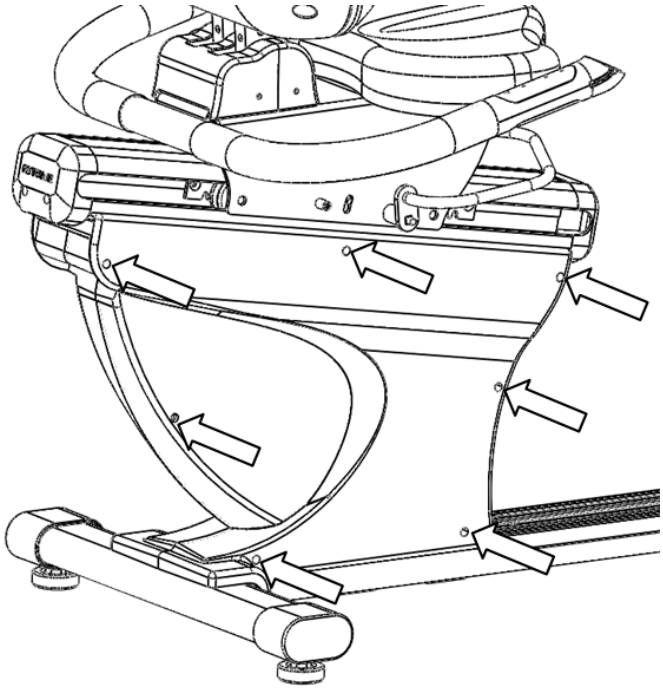

- Align the left & right rear shroud plastics.
- Re-install quantity 7 screws to the rear right shroud, using a phillips head screwdriver (not provided).

ASSEMBLY STEPS:

Unit Leveling (if necessary):

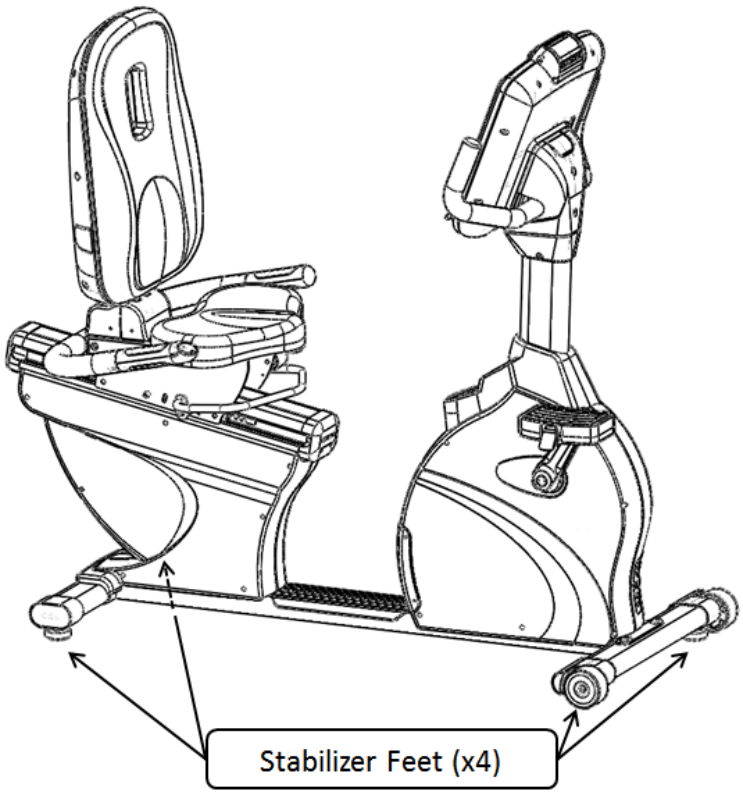

Turn feet (4x, located on the front and rear stabilizer) to adjust the levelness of the unit.

Final Unit Connections:

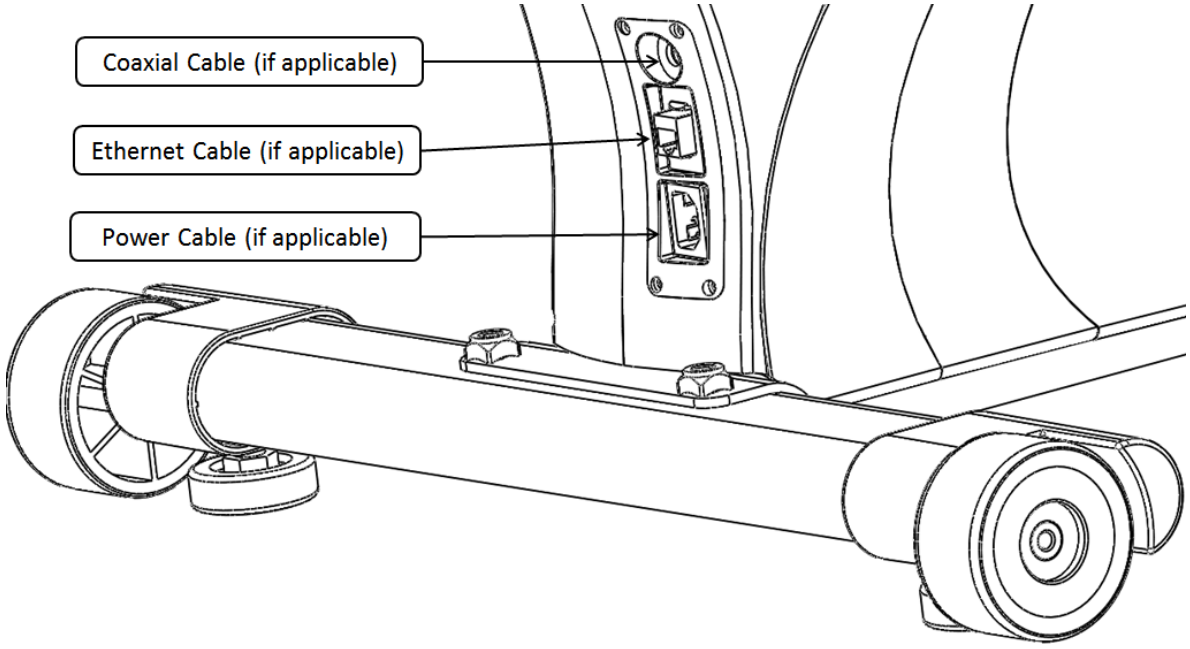

WIRING DIAGRAM:

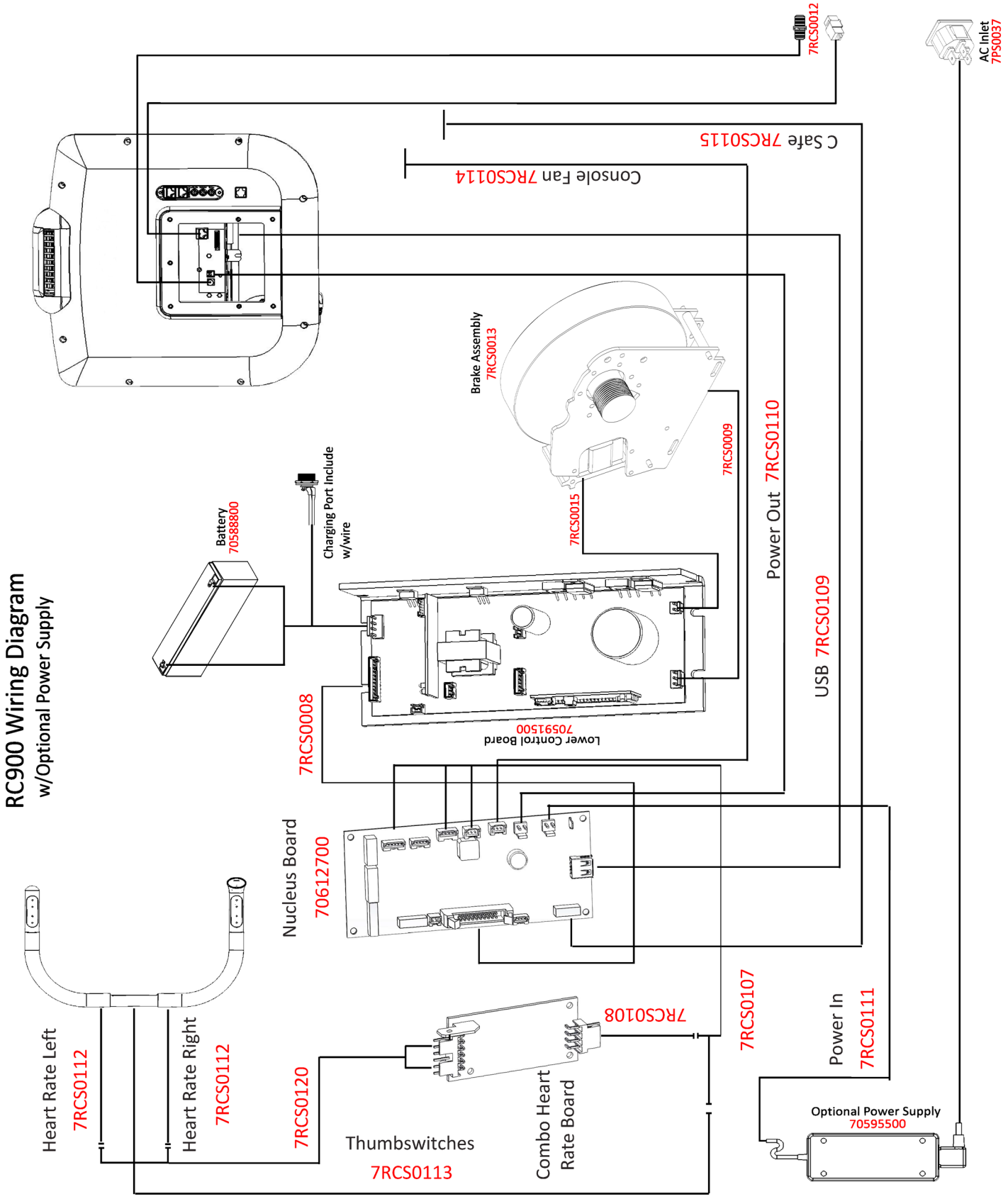

CHAPTER 2: ASSEMBLY GUIDE

WIRING DIAGRAM:

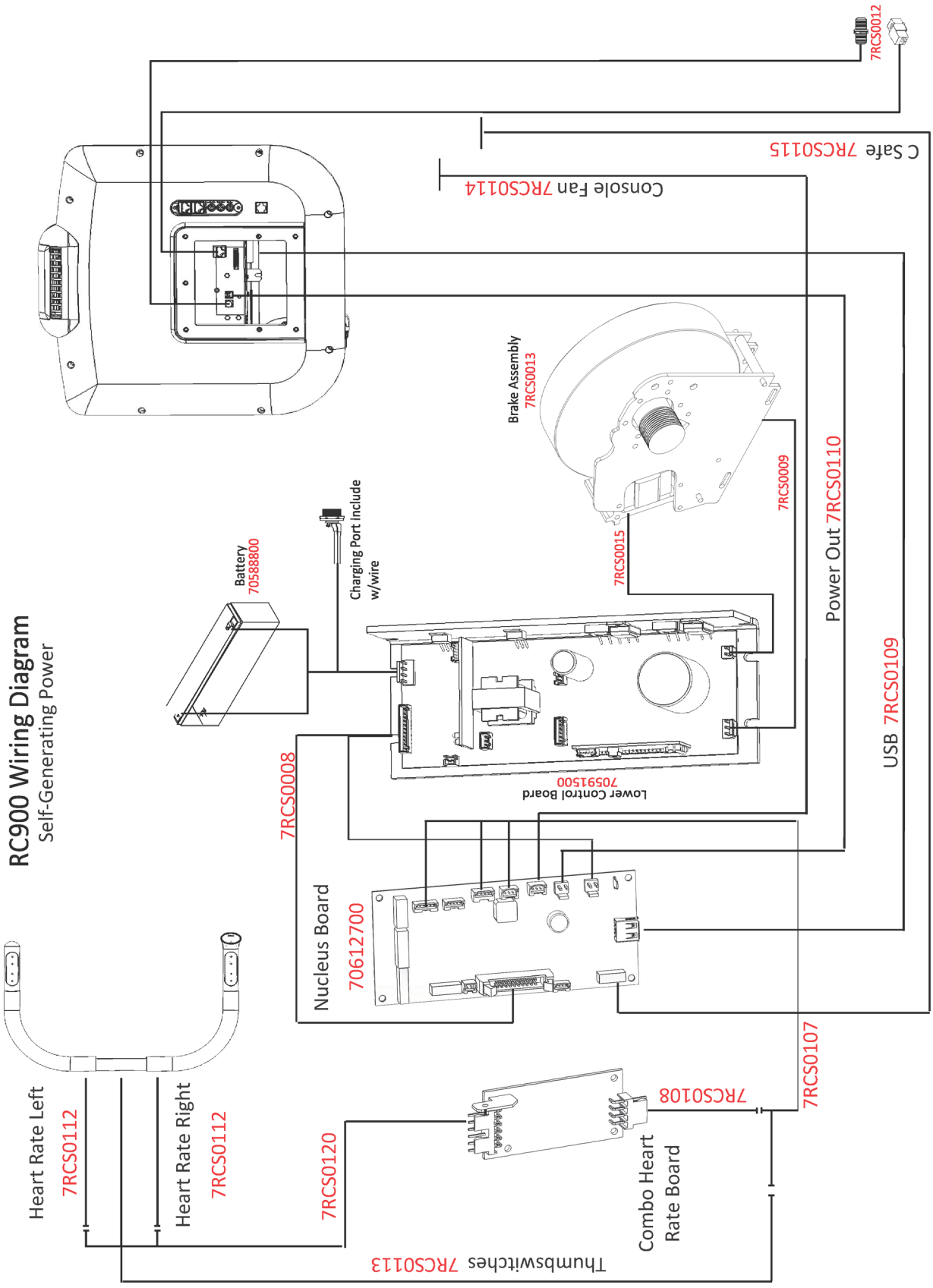

PRODUCT OVERVIEW:

PRODUCT OVERVIEW:

Console Assembly:
The console allows the user to set up a workout program and control the bike during a workout

Quick Access Keys:
Allows the user to make fast, convenient adjustments to the workout intensity.

Contact Heart Rate Pads:
Allows the user to check their heart rate without wearing a wireless chest strap.

Bottle Holder:
Holds an average size drink bottle for convenient use during a workout.

Seat Adjustment Bar:
Used to adjust the position of the seat to a comfortable position for the user.

Pedals:
Moving part of the bike that provides resistance to the lower body during a workout.

Leveling Feet:
An adjustable system used to aid in the leveling the bike.

Battery Charge Port:
An external port used to charge the unit's internal battery.

Coaxial Port:
Delivers television signal to the unit.

Ethernet Port:
Used to provide a network connection for compatible console options.

Power Cord:
Delivers power from the wall outlet to the bike.

CHAPTER 4: CARE & MAINTENANCE

CARE & MAINTENANCE:

It is important to perform the minor maintenance tasks described in this section. Failure to maintain the elliptical as described here could void the TRUE Fitness Warranty. To reduce the risk of electrical shock, always unplug the unit from its power source before cleaning or performing any maintenance tasks.

Inspection:

TRUE Fitness is not responsible for performing or scheduling regular maintenance or inspections.
Users should inspect the bike daily. Look and listen for slipping belts, loose fasteners, unusual noises, worn or frayed power cords, and any other indications that the equipment may be in need of service. If any of these are noticed, obtain service. Do not attempt to use the bike until proper service has been performed or damaged parts have been replaced.

Important:

If you determine that the bike needs service, make sure that the bike cannot be used inadvertently. Turn the unit off, and then unplug the power cord from its power source. Make sure other users know that the bike needs service.
To order parts or to contact a TRUE Authorized Service representative, please visit www.truefitness.com.

CLEANING THE EQUIPMENT:

After Each Use:

Use GymWipes™ Antibacterial wipes or spray a solution of 30 parts water to 1 part mild detergent to dampen a soft cloth and wipe all exposed surfaces.
Use a LCD/screen cleaner or spray a solution of 1 part 91% isopropyl alcohol and 1 part water to dampen a soft cloth and wipe the surface of the console. This helps remove fingerprints, dust, and dirt.

Weekly:

Vacuum any dust or dirt that might have accumulated under or around the bike or any cover vents.
*Clogged air vents can prevent adequate cooling, causing a shortened life.

⚠CAUTION:

Do not use any acidic cleaners. Doing so will weaken the paint or powder coatings and may void the TRUE Fitness Warranty. Never pour water or spray liquids on any part of the bike. Allow the bike to dry completely before using. Frequently vacuum the floor underneath the unit to prevent the accumulation of dust and dirt, which can affect the smooth operation of the unit.

LUBRICATION:

Remove the pedals from the crank quarterly and lubricate the threads that attach the pedals to the cranks to prevent corrosion.
Note: The user's left side pedal is reverse threaded.

CHAPTER 4: CARE & MAINTENANCE

OTHER SCHEDULED PREVENTIVE MAINTENANCE:

TRUE recommends that quarterly scheduled maintenance be performed by a qualified service technician. Please contact your dealer or visit www.truefitness.com to contact a local TRUE authorized service technician.

Scheduled Preventive Maintenance:

- Check error log in console.
- Remove shroud covers and vacuum any debris out of the speed sensor, control electronics and moving parts.
- Move unit and vacuum underneath.
- Check belt tension and tracking.
- Inspect all fasteners.
- Inspect all electrical connections.
- Inspect all components for abnormal or premature wear.
- Inspect and lubricate pedal threads on bike to prevent corrosion.

⚠ CAUTION:

Use only TRUE Fitness certified service providers.

LONG TERM STORAGE:

When the bike is not in use for any length of time, turn it off. Make sure that the power cord is unplugged from the power source and is positioned so that it will not become damaged or interfere with people or other equipment.

Storing the Chest Strap:

Store the chest strap in a place where it remains free of dust and dirt such as, in a closet or drawer. Be sure to protect the chest strap from extremes in temperature. Do not store it in a place that may be exposed to temperatures below 32° F (0° C). To clean the chest strap, use a sponge or soft cloth dampened in mild soap and water. Dry the surface thoroughly with a clean towel.

CHAPTER 5: CUSTOMER SERVICE

CONTACTING SERVICE:

TRUE Fitness recommends that you gather the serial number, model number, and a brief description of the reason for the request. After information has been gathered you may choose to contact your selling dealer or local service company to set an appointment. (If you are not familiar with who is in your area, you may visit our website at www.truefitness.com and use our dealer locator to obtain the contact information for the closest dealer).

You may also contact TRUE Fitness' customer support team by calling 800.883.8783 or e-mailing us at service@truefitness.com Monday – Friday during normal business hours.

TRUE FITNESS SERVICE DEPARTMENT
865 HOFF ROAD
ST. LOUIS, MO 63366
1.800.883.8783
HOURS OF OPERATION: 8:30 A.M. - 5:00 P.M. CST
E-MAIL: service@truefitness.com

CONTACTING SALES:

Interested in TRUE Products? Please contact us with any sales or product inquires so that we may direct you to the appropriate sales representative to answer your questions.

TRUE FITNESS HOME OFFICE
865 HOFF ROAD
ST. LOUIS, MO 63366
1.800.426.6570
HOURS OF OPERATION: 8:30 A.M. - 5:00 P.M. CST
E-MAIL: sales@truefitness.com

CHAPTER 5: CUSTOMER SERVICE

REPORTING FREIGHT OR PARTS DAMAGE:

Unfortunately, sometimes materials can be damaged during shipment. If materials are damaged during shipment, please follow the guidelines below to determine the appropriate process for you to follow in case of damages.

Severe Damage:

Obvious damage to external packaging / internal product. Please **refuse** the shipment and it will be returned to TRUE Fitness by the carrier. Contact the TRUE Fitness customer support team by calling 800.883.8783 or sales support team by calling 800.426.6570 Monday-Friday during normal business hours to notify us that the shipment has been refused. Once we have received the damaged shipment, a replacement shipment will be sent to you. Only refuse the damaged piece if the shipment is multiple boxes.

Slight Damage:

The box may have minimal damages and you are not sure if the actual product is damaged or not. You **must** sign the bill of lading as damaged when accepting the shipment. Once you have opened the box and you have determined something is indeed damaged please gather the serial number, model number, description and photos of damages. Please make sure the photos include the damaged product as well as the damaged box the product arrived in. Contact the TRUE Fitness customer support team by calling 800.883.8783 or sales support team by calling 800.426.6570 Monday-Friday during normal business hours.

Concealed Damage:

You may receive a shipment that looks intact and discover once the box has been opened that there are hidden damages. Please notify the carrier **immediately**. We will not be able to file a claim if the carrier is not notified in a timely manner. Once you have called the carrier you will need to gather the serial number, model number, description and photos of damages. Contact the TRUE Fitness customer support team by calling 800.883.8783 or sales support team by calling 800.426.6570 Monday-Friday during normal business hours.

CHAPTER 6: ADDITIONAL INFORMATION

TROUBLESHOOTING GUIDE:

This troubleshooting guide is intended to assist in diagnostics only and is not all inclusive. Technical specifications, error codes and programming are subject to change without notice. TRUE accepts no liability for any damage or loss suffered by persons whom rely wholly or in part on any description or statement contained within this manual. Please visit www.truefitness.com for current product manuals and contact the TRUE Service Department at 800-883-8783 for assistance with troubleshooting and diagnostics.

Malfunction	Possible Cause	Corrective Action
No Power	Unit turned off	Verify the On/Off switch is at the ON position
	Damaged power cord	Replace power cord
	Power cord not fully seated in socket	Inspect power connection at the unit and outlet
	No power at wall outlet	Using a voltmeter to verify power at wall outlet
	Optional ERP board damaged	Contact TRUE Fitness Customer Service Department (If applicable)
	Battery is discharged	Charge the battery overnight with optional power supply
	Motor control board damaged	Contact TRUE Fitness Customer Service Department
Unit resets or pauses randomly	Damaged power cord	Replace power cord
	Power cord not fully seated in socket	Inspect power connection at the unit and outlet
	Insufficient power	Verify output voltage from 20A outlet with a voltmeter
	Error code is displayed on console	Contact TRUE Fitness Customer Service Department
	Speed sensor out of alignment	Contact TRUE Fitness Customer Service Department
	Pinched or loose main communication cable	Contact TRUE Fitness Customer Service Department
Resistance hesitates or slips when pedaling	Loose belt tension	Contact TRUE Fitness Customer Service Department
Rubbing or knocking sound from unit when in operation	Uneven floor	Adjust equipment with leveling feet.
	Loose hardware	See Chapter 5: inspections
	Loose pedal	See Chapter 5: inspections
	Bearings may be damaged	Contact TRUE Fitness Customer Service Department
	Brake assembly may be damaged	Contact TRUE Fitness Customer Service Department
	Drive belt may be misaligned	Contact TRUE Fitness Customer Service Department

CHAPTER 6: ADDITIONAL INFORMATION

TROUBLESHOOTING GUIDE:

Malfunction	Possible Cause	Corrective Action
No TV displayed or low quality	Low or bad video signal	Contact video provider
		NTCS dBmV0 through 15.6 ATCS/QAM dBmV-10 through 15.5
	Loose F type connecter (coaxial cable)	Inspect all connections
	Encrypted video	Obtain set top box from video provider
	Channels or format type not correct	Verify video type with provider; analog (NTCS), digital air (ATCS), digital cable (QAM)
		Rescan TV channels
	Tuner Invalid	Contact TRUE Fitness Customer Service Department
Heart rate is displaying erratically or not displaying	Transmitter belt contacts are not making good contact with the skin	Re-adjust the transmitter belt so that it is in full contact with the skin
	Contacts on the transmitter belt are not moist	Moisten the contacts on the transmitter belt
	Transmitter belt is not within 3 feet (1 meter) of the heart rate receiver	Adjust your position on the belt so that you are within 3 foot (1 meter) of the console
	Transmitter belt is not the correct frequency or is encoded	Polar equip or compatible receiver use 4.8kHz un-encoded receiver
	The battery inside the transmitter belt is depleted	Replace the transmitter belt with a compatible transmitter belt
	Another user wearing a compatible transmitter strap is within 3 foot (1 meter) of the unit	Move the units so that there is more space in-between units
	Environmental interference from high voltage power lines	Move the unit to another position within the room or move the cause of the interference until heart rate reading are stable. If the probable source of interference is plugged into the same outlet move the suspect source to another outlet.
	Environmental interference from computers	
	Environmental interference from motor driven appliances	
	Environmental interference from cell or cordless phone	
	Environmental interference from Wi-Fi router	

Fault Code	Category	Description	Cause	Corrective Action
Fault CN00: Corrupted Console Configuration	Console	Corrupted brainboard configuration - fails integrity check	Corrupt software	Power cycle
				Re-configure console
			Firmware and software versions are not compatible	Re-install software/firmware
				Contact dealer or TRUE service
Fault CN01: Internal Fault	Console	Math error - software	Console configured incorrectly	Power cycle
				Re-configure console
			Corrupt Software	Re-install software/firmware
				Contact dealer or TRUE service

CHAPTER 6: ADDITIONAL INFORMATION

TROUBLESHOOTING GUIDE:

Fault Code	Category	Description	Cause	Corrective Action
Fault CN02: Invalid Console Configuration	Console	The product configuration data has failed validation checks (incline ranges make no sense, etc.)	Console configured incorrectly	Power cycle
				Re-configure console
			Loose cable	Contact dealer or TRUE service
Fault CN03: Stuck Key	Console	Membrane Key stuck down/closed	Membrane key is damaged	Contact dealer or TRUE service
Fault CN04: Lower Board Comm Fault (Treadmill Only)	Console	Brainboard fails to receive timely communication responses from lower board - Fault after 3 retries	Unit is configured as a treadmill	Re-configure console
Fault CN05: No Lower Control	Console	No lower board connected to console - detection wires not connected.	Loose cable	Power cycle
				Check cable connections
			Console configured incorrectly	Reconfigure console
Fault CN06: Config Mismatch	Console	Console is configured for a product different than that to which it is connected.	Console configured incorrectly	Power cycle
				Re-configure console
			Loose cable	Check cable connections
Fault CN07: Calibration Timeout	Console	Stride Calibration was not able to complete within allowed time.	Low AC Line Voltage	Retry calibration
				Verify AC Voltage at Outlet
Fault CN08: Calibration Failed - Lower Limit Not Reached	Console	During Stride calibration, the motor stalled before reaching what should be the lower limit.	Potentiometer value is out of range	Contact dealer or TRUE service
Fault CN11: Calibration Failed - Upper Limit Not Reached	Console	During Stride calibration, the motor stalled before reaching what should be the upper limit.	Potentiometer value is out of range	Contact dealer or TRUE service
Fault CN24: BB Comm Fault	Console	SBC cannot communicate with Brainboard	Console	Power cycle
				Contact dealer or TRUE service
Fault CN25: Firmware Mismatch	Console	Firmware on brainboard not compatible with SBC software	Corrupt software	Power cycle
				Reconfigure Console
			Firmware and software versions are not compatible	Re-install software/firmware
				Contact dealer or TRUE service
Fault X101: Stride Adjust Stall	Lower Board	Stride Motor Stall	Jammed or overheated motor	Contact dealer or TRUE service
Fault X102: Stride Adjust Runaway	Lower Board	Stride Motor Runaway	Stride motor not moving as expected	Contact dealer or TRUE service

TRUE COMMERCIAL LIMITED WARRANTY RC900 RECUMBENT BIKE

Save Time and Register Online!
Activate Multiple Warranties at truefitness.com

All TRUE® Fitness products are distributed by TRUE and are warranted to the original registered product purchaser and the parts of the TRUE product (the "Product") listed below, under normal use and service, shall be free of manufacturing defects in workmanship and materials only for the period of time beginning from the original date of purchase set forth below:

Frame*	Lifetime
Parts	
Transcend Touchscreen	**3 Year**
Escalate[15] Console	**3 Year**
Electrical	**3 Year**
Wear Items	**3 Year**
Cosmetics	**6 Months**
Labor	
Parts	**3 Years**
Cosmetics	**6 months**
Device Connectivity	
Headphone Jack & USB Port	**90 Days Parts, No Labor**

NOTE: Warranty valid for USA and Canada only.
NOTE: Failure to register this product will result in no servicing or authorization of parts to be shipped.
NOTE: Buying after-market products from a 3rd party will result in voided warranty.
NOTE: This product is intended for Commercial use which includes facilities where usage is in excess of 8 hours per day. This includes all dues-paying facilities (regardless of usage) as well as many non-dues-paying facilities. If this product will not be used in this particular setting, please contact TRUE as this warranty is void.

Frame: The frame is warranted for defects in material and workmanship for as long as the original purchaser owns the Product. The frame is warranted for labor and freight (for parts shipped from TRUE) for three years from date of purchase.* This limited warranty on structural frame does not include paint or coatings.

Parts: The recumbent bike, electrical parts, and wear items are warranted for defects in material and workmanship for three years with three years labor warranty. The Transcend touchscreens and Escalate[15] consoles are warranted for defects in material and workmanship for three years with three years labor warranty. This limited warranty does not cover damage or equipment failure resulting from or caused by improper assembly/installation, failure to follow instructions and warnings in owner's manual, accident, misuse, abuse, unauthorized modification, or failure to provide reasonable and necessary maintenance.* TRUE Fitness shall not warrant the performance of the heart rate system on its products, as the heart rate system performance varies, based on user's physiology, age, method of use and other factors.* This limited warranty shall not apply to software version upgrades.

Cosmetics: The recumbent bike cosmetic parts are warranted for defects in material and workmanship for six months with labor warranty to match the parts warranty period. This limited warranty does not cover damage or equipment failure resulting from or caused by improper assembly/installation, failure to follow instructions and warnings in owner's manual, accident, misuse, abuse, unauthorized modification, or failure to provide reasonable and necessary maintenance. This limited warranty will apply to but may not be limited to plastic covers, shrouds, caps, badges, overlays, paint, coatings, and grips.

Device Connectivity: Device Connectivity elements; headphone jack and USB Port are warranted for defects in material and workmanship for 90 days with no labor warranty.

Labor: Labor is covered for a period of three years from the date of purchase unless otherwise expressed within this limited warranty as long as a TRUE authorized service provider performs the service. Service that requires over 50 miles of travel may be subject to additional charges. Reasonable and necessary maintenance guidelines can be found in the owner's manual.

Claims Procedure: TRUE Limited Warranty service may be obtained by contacting the authorized TRUE dealer from whom the Product was purchased. If the dealer from whom the Product was purchased is no longer an authorized TRUE dealer, then TRUE Limited Warranty service may be obtained by contacting TRUE directly at:

TRUE Fitness, Service Department
865 Hoff Road, St. Louis, MO 63366
1.800.883.8783
Hours of operation 8:30am - 5:00 pm CST

TRUE COMMERCIAL LIMITED WARRANTY RC900 RECUMBENT BIKE

Save Time and Register Online!
Activate Multiple Warranties at truefitness.com

1. THIS LIMITED WARRANTY GIVES YOU SPECIFIC LEGAL RIGHTS AND YOU MANY ALSO HAVE OTHER RIGHTS, WHICH VARY FROM STATE TO STATE.

2. This Limited Warranty can be processed only if the Warranty Registration Form is completed on-line; or if the attached form is filled in, signed by the original purchaser and mailed to TRUE within 30 days of purchaser's receipt of this Product. The serial number must be intact on the Product for this Limited Warranty to be valid.

3. This Limited Warranty applies to the product only while the Product remains in the possession of the original purchaser and is not transferable.

4. This Limited Warranty becomes VALID ONLY if the Product is initially assembled/installed by a TRUE authorized dealer/ technician (if anyone other than a TRUE authorized dealer/ technician initially assembles and installs the Product, this Limited Warranty will be void unless the written authorization of TRUE is first obtained).

5. This Limited Warranty does not cover damage or equipment failure resulting from or caused by improper assembly/ installation, failure to follow instructions and warnings in owner's manual, accident, misuse, abuse, unauthorized modification, or failure to provide reasonable and necessary maintenance (as referenced in the owner's manual.)

6. This Limited Warranty applies only to the cost of repair or replacement of parts and does not include labor (beyond the above warranty period), transportation, service, return and freight charges associated therewith except as expressly specified herein.

7. This Limited Warranty shall not apply to: Service calls to correct installation of the equipment or instruction to owners on how to use the equipment; or any labor costs incurred beyond the applicable labor warranty period.

8. This Limited Warranty, which is given expressly and in lieu of all other express warranties, constitutes the only warranty made by TRUE.

9. ANY IMPLIED WARRANTY, INCLUDING WITHOUT LIMITATION THE WARRANTIES OF MERCHANTABILITY AND FITNESS FOR A PARTICULAR PURPOSE, IS LIMITED IN DURATION AND REMEDY TO THE TIME PERIOD COVERED BY THE LIMITED WARRANTY. SOME STATES DO NOT ALLOW LIMITATIONS ON HOW LONG AN IMPLIED WARRANTY LASTS, SO THE ABOVE LIMITATION MAY NOT APPLY TO YOU.

10. THE REMEDIES DESCRIBED ABOVE ARE YOUR SOLE AND EXCLUSIVE REMEDIES AND TRUE'S ENTIRE LIABILITY FOR ANY BREACH OF THIS LIMITED WARRANTY. TRUE'S LIABILITY SHALL UNDER NO CIRCUMSTANCES EXCEED THE ACTUAL AMOUNT PAID BY YOU FOR THE PRODUCT, NOR SHALL TRUE UNDER ANY CIRCUMSTANCES BE LIABLE FOR ANY CONSEQUENTIAL, INCIDENTAL, SPECIAL OR PUNITIVE DAMAGES OR LOSSES, WHETHER DIRECT OR INDIRECT. SOME STATES DO NOT ALLOW THE EXCLUSION OR LIMITATION OF INCIDENTAL OR CONSEQUENTIAL DAMAGES, SO THE ABOVE LIMITATION OR EXCLUSION MAY NOT APPLY TO YOU.

NOTE TO AUTHORIZED WARRANTY LABOR PROVIDERS:
Warranty labor reimbursement or warranty parts rights may not be transferred to, reassigned to, a third party without the express written consent of TRUE. Even jobbing out warranty labor requires TRUE's written approval.

RC900 RECUMBENT BIKE SERIAL NUMBERS:
The RC900 recumbent bike comes with two serial numbers; one on the base and one on the display console (see diagram below). The serial number on the base is on the crossbar under the running surface. The console serial number is located on the bottom right side of each console. Please write down your serial numbers below and keep for your records.

CONSOLE SERIAL NUMBER:

BASE SERIAL NUMBER:

SAMPLE SERIAL NUMBER STICKER:

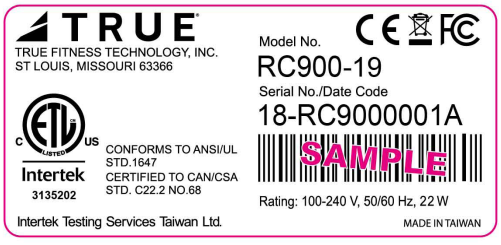

Keep this page for your records

TRUE

COMMERCIAL LIMITED WARRANTY
RC900 RECUMBENT BIKE

Thank you for purchasing a TRUE product. To validate the TRUE product warranty the fast and easy way, please go on-line now to truefitness.com and register your product. The information you provide will never be distributed to any other individuals or agencies for any purpose. If you prefer to mail your warranty card, have the owner of the product complete the information below and return it to TRUE Fitness within 30 days from the date of equipment installation.

Please Note: Failure to register this product will result in no servicing or authorization of parts to be shipped.

To mail your warranty information, please fill in the information below and mail to: Service Dept., TRUE Fitness, 865 Hoff Road, St. Louis, MO 63366 (or save postage and register online at www.truefitness.com)

Commercial Warranty Registration

PLEASE PROVIDE BOTH SERIAL NUMBERS BELOW. REQUIRED FOR WARRANTY REGISTRATION:

CONSOLE SERIAL NUMBER:

BASE SERIAL NUMBER:

Model Type_____

Date of Purchase_____

Your Company Name_____

Contact First Name_____

Contact Last Name_____

Address_____

City_____State_____ZIP_____

Email Address_____Website_____

Phone_____Fax _____

1. Where did you first learn about TRUE?
___ a. Dealer ____ b. Website
____ c. Advertisement ____ d. Referral
____ e. Current Customer ____ f. Other_____

2. Why did you purchase a TRUE product?
___ a. Design/Appearance ___ b. Dealer Suggestion
___ c. Price/Value ___ d. Quality Construction
___ e. Performance ___ f. TRUE Reputation
___ g. Other_____

3. Please indicate your type of facility:
___ a. Apartment/Condo ___ b. Corporate Fitness Center
___ c. Municipality ___ d. Health Club/Gym/Spa
___ e. Hotel/Resort ___ f. Military Base
___ g. Student Rec Center ___ h. Other

4. What other types of equipment does your company currenly own?
___ a. Treadmill Brand _____
___ b. Bike Brand _____
___ c. Elliptical Brand _____
___ d. Free Weights/Gym Brand _____

5. How many people use your facility on a daily basis?
___ a. <25 ___ b. 25-75
___ c. 76-150 ___ d. 150+

6. Do you plan to purchase more fitness equipment in the next 6-12 months?
____ Yes ____ No

7. If you answered "yes" to question 6, what type do you plan to purchase?
____ a. Treadmill ____ b. Elliptical
____ c. Stationary Bike ____ d. Free Weights
____ e. Gym ____ f. Other _____

8. Would you recommend TRUE to other club owners?
____ Yes ____ No

9. You are a valued TRUE customer and your suggestions allow us to continually improve your experience. Is there anything else you would like us to know? Please explain: